

PERMANENT SIGN FOUNDATION DESIGN
OH-16, INTERSTATE 126 – STA. 440+94.34
RIGHT SIDE

Richland County, South Carolina
Carolina Crossroads – Phase 1

for
Archer-United JV

June 11, 2024

SCDOT
South Carolina Department of Transportation
ACCEPTED
☐ AS NOTED
REVIEWED BY: John Egan 8/6/24
DATE

GeoEngineers

153 Cordaville Road, Suite 300
Southborough Massachusetts 01772
508.283.6340

GeoEngineers

153 Cordaville Road, Suite 300
Southborough, Massachusetts 01772
508.283.6340

June 11, 2024

Archer-United, JV
1021 Briargate Circle
Columbia, South Carolina

Attention: Eric Lockamy

Subject: Permanent Sign Foundation Design
OH-16, Interstate 126 – Sta. 440+94.34; Right Side
Richland County, South Carolina
Carolina Crossroads – Phase 1
File No. 18461-016-00

GeoEngineers, Inc. (GeoEngineers) has prepared the attached design calculations and drawings for permanent foundations to support the right side of OH-16 on the above referenced project. We have included the original design prepared by Walpar as Attachment B for reference. The foundation loads we used in our design are based on that information. Please note that our drawings specify that the sign structure be shifted along the roadway alignment to permit the foundations to be centered about the Gravix wall stem.

We trust that this information satisfies the needs for this task at this time. Please contact Michael Flynn at (413) 537-3013 with questions or comments.

Sincerely,
GeoEngineers, Inc.

Michael T. Flynn, PE
Associate Geostructural Engineer

Yelena N. Bronshvayg, PE
Senior Structural Engineer

TABLE OF CONTENTS

Permanent Sign Foundation Design
OH-16, Interstate 126 – Sta. 440+94.34; Right Side
Richland County, South Carolina
Carolina Crossroads – Phase 1
File No. 18461-015-00

DRAWINGS	DESCRIPTION
S-0 through S-2	Design drawings

CALCULATIONS	DESCRIPTION
Design and analyses	Design of shaft foundations considering geotechnical and structural capacity
Anchor analyses	Analyze anchor bolts

ATTACHMENTS	DESCRIPTION
A	Boring location plan and selected boring logs
B	Sign design prepared by Walpar

Drawings

GENERAL NOTES

1. THIS PLAN SHOWS DETAILS PERTAINING TO THE CONSTRUCTION OF THE PERMANENT FOUNDATION (RIGHT SIDE) FOR OVERHEAD SIGN STRUCTURE OH-16 ON THE SCDOT I-26 PROJECT IN RICHLAND COUNTY, SOUTH CAROLINA. PERMANENT FOUNDATIONS CONSIST OF CAST IN PLACE CONCRETE SHAFTS.
2. THE WORK SHOWN ON THESE PLANS IS BASED ON INFORMATION PROVIDED BY ARCHER-UNITED JV (CONTRACTOR), INCLUDING CONTRACT PLANS.
3. CONFORM TO THE CONSTRUCTION SEQUENCE, NOTES, AND ALL OTHER REQUIREMENTS OF THIS PLAN UNLESS OTHERWISE APPROVED BY GEOENGINEERS, INC. (GEOENGINEERS).
4. ALL WORK TO BE PERFORMED IN ACCORDANCE WITH ALL LOCAL, STATE AND FEDERAL CODES.
5. ALL EXCAVATIONS SHALL CONFORM TO THE REQUIREMENTS OF THE FEDERAL REGISTER BY THE DEPARTMENT OF LABOR, OCCUPATIONAL SAFETY AND HEALTH ADMINISTRATION, 29 CFR PART 1926, FOR EXCAVATIONS. ALL ANCILLARY ITEMS SUCH AS HANDRAILS WHICH ARE REQUIRED BY OSHA, BUT NOT SHOWN ON THE PLANS, SHALL BE INSTALLED PER OSHA STANDARDS. TEMPORARY SUPPORT OF EXCAVATION DESIGN BY OTHERS.
6. SUBSURFACE CONDITIONS SHOWN ON THIS DRAWING AND USED IN THE DESIGN OF THE WORK SHOWN HEREIN HAVE BEEN TAKEN FROM NEARBY BORINGS PROVIDED IN THE CONTRACT DOCUMENTS.
7. REPORT CHANGES IN CONTRACT DOCUMENTS AND SUBSURFACE CONDITIONS AS THEY BECOME EVIDENT SO THAT THE IMPACT ON THE PERMANENT DESIGN CAN BE EVALUATED AND REVISED ACCORDINGLY BY GEOENGINEERS.
8. THE CONTRACTOR IS RESPONSIBLE TO FIELD VERIFY LOCATIONS OF ALL EXISTING AND PROPOSED CONSTRUCTION. REFER TO CONTRACT DRAWINGS FOR EXISTING AND PROPOSED LOCATIONS.
9. IN PREPARATION OF THESE DRAWINGS, GEOENGINEERS HAS NOT BEEN CONTRACTED, NOR IS GEOENGINEERS RESPONSIBLE TO PROVIDE FIELD OBSERVATION OR VERIFICATION OF THE CONSTRUCTION. ON SITE INSPECTION TO VERIFY COMPLIANCE WITH THESE PLANS SHALL BE PERFORMED BY THE CONTRACTOR IN ACCORDANCE WITH ALL PROJECT REQUIREMENTS.
10. PERMANENT FOUNDATION SHAFTS SHALL BEAR AT OR BELOW PROPOSED WALL FOUNDATION OR LEVELING PAD ELEVATIONS (WHICHEVER IS DEEPER) AND BE ESTABLISHED IN PARTIALLY WEATHERED BEDROCK (PWR) OR BEDROCK.
11. SAMPLING FREQUENCY AND TESTING OF CONCRETE USED IN PERMANENT SHAFTS SHALL BE PERFORMED IN ACCORDANCE WITH SCDOT STANDARDS. COPIES OF TEST RESULTS SHALL BE PROVIDED TO GEOENGINEERS.
12. SHAFTS SHALL NOT BE LOADED UNTIL SHAFT CONCRETE ATTAINS A MINIMUM COMPRESSIVE STRESS OF 2,500 PSI.
13. SHAFTS MAY BE CONSTRUCTED BY PLACING A VERTICALLY CONTINUOUS, TEMPORARY CIRCULAR FORM DURING BACKFILL PLACEMENT OF MODULAR WALL OR BY DRILLING THROUGH NEWLY PLACED WALL BACKFILL AFTER BACKFILL HAS BEEN PLACED. IF A FORM IS USED, IT SHALL BE ABLE TO WITHSTAND COMPACTION STRESSES INDUCED BY STANDARD WALK BEHIND EQUIPMENT DURING PLACEMENT OF BACKFILL AROUND THE FORM. FORM MAY CONSIST OF ANY MATERIAL MEETING THIS REQUIREMENT. SHAFT DESIGN (STRENGTH) DOES NOT RELY ON TEMPORARY FORM. TEMPORARY FORM MAY BE ABANDONED IN PLACE.

MATERIAL NOTES

UNLESS OTHERWISE NOTED, SUBSTITUTION OF PERMANENT FOUNDATION ELEMENTS, MATERIALS OR ANCHORS SHALL BE APPROVED BY GEOENGINEERS IN WRITING PRIOR TO USE.

1. SHAFT CONCRETE SHALL HAVE A MINIMUM 28-DAY COMPRESSIVE STRENGTH OF 4,000 PSI.
2. STEEL REINFORCING BARS SHALL CONFORM TO ASTM A615, GRADE 60.
3. ALL STRUCTURAL STEEL SHALL BE GALVANIZED PER ASTM A123.
4. ALL HEADED ANCHOR BOLTS SHALL CONFORM TO ASTM 1554 OR AASHTO M314-90, GR 55.

DESIGN CRITERIA

1. THE DESIGN OF THE PERMANENT FOUNDATION (SHAFT) IS BASED ON LOADS PROVIDED IN THE DESIGN DOCUMENTS PREPARED BY WALPAR. THAT DOCUMENT IS TITLED "OH-16 FOUNDATION LOADING DATA", AND WAS SEALED MARCH 19, 2024
2. PERMANENT FOUNDATION DESIGN IS BASED ON AASHTO STANDARDS.

DRAWING INDEX

SHEET	TITLE
S-0:	NOTES
S-1:	SECTION VIEWS
S-2:	TYPICAL DETAILS

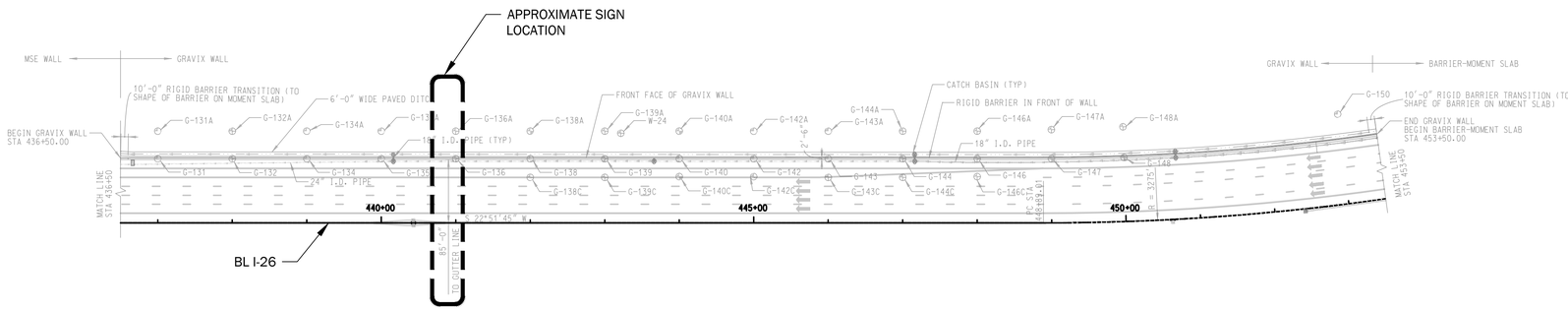

SUGGESTED CONSTRUCTION SEQUENCE

1. PERFORM EXCAVATIONS TO TOP OF PWR (OR LOWER).
2. PLACE TEMPORARY FORM.
3. CONSTRUCT MODULAR WALL, PLACING AND COMPACTING FILL AROUND TEMPORARY FORM.
4. ONCE FINAL GRADE IS REACHED, PLACE REINFORCEMENT AND ANCHOR BOLTS IN FORM.
5. PLACE CONCRETE.
6. ONCE CONCRETE HAS ATTAINED MINIMUM SPECIFIED STRENGTH, CONSTRUCT OVERHEAD SIGN.

KEY PLAN

0 100 200

GRAPHIC SCALE IN FEET

NOTE:
BASEMAP PER CONTRACT SHEET S12 "WALL '2B' - SEGMENT 2 GRAVIX WALL STA 436+50 TO 453+50".

SOUTH CAROLINA LICENSED PROFESSIONAL ENGINEER No. 39106 ELENA BRONSHTEIN 06-11-2024

NO.	DATE	BY	ISSUE / DESCRIPTION

DESIGNED BY:	JER
DRAWN BY:	TDP
APPROVED BY:	MF
REVISION NO.:	---
DATE:	06/11/2024

GEOENGINEERS
WWW.GEOENGINEERS.COM

PREPARED FOR: ARCHER UNITED JOINT VENTURE

OVERHEAD SIGN 16 (OH-16), RIGHT SIDE, INTERSTATE 26 - STA. 440+94.34
RICHLAND COUNTY, SOUTH CAROLINA - SCDOT PROJECT P039718

NOTES

DRAWING NUMBER: S-0

SHEET: 1 OF 3

Plotted: 06/11/2024, 11:36 | jrankin P:\18\18461016\CAD\00\OH16\v01\1 S-0 Notes.dwg

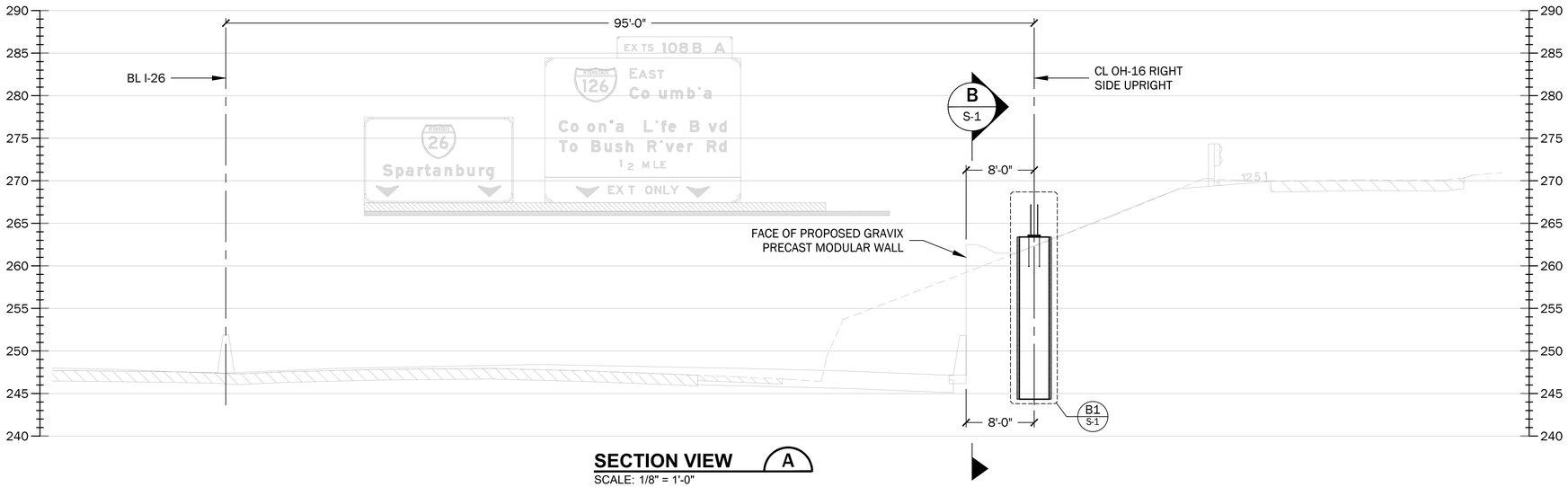

SECTION VIEW A

SCALE: 1/8" = 1'-0"

8' 6' 4' 2' 0 8'

GRAPHIC SCALE: 1/8" = 1'-0"

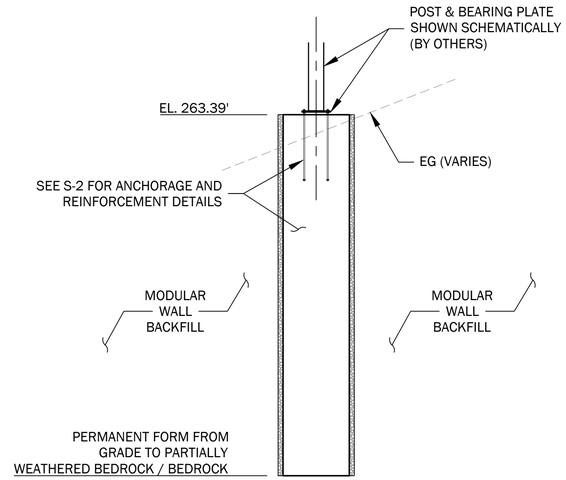

ELEVATION VIEW B1

SCALE: 1/4" = 1'-0" S-1

4' 2' 0 4'

GRAPHIC SCALE: 1/4" = 1'-0"

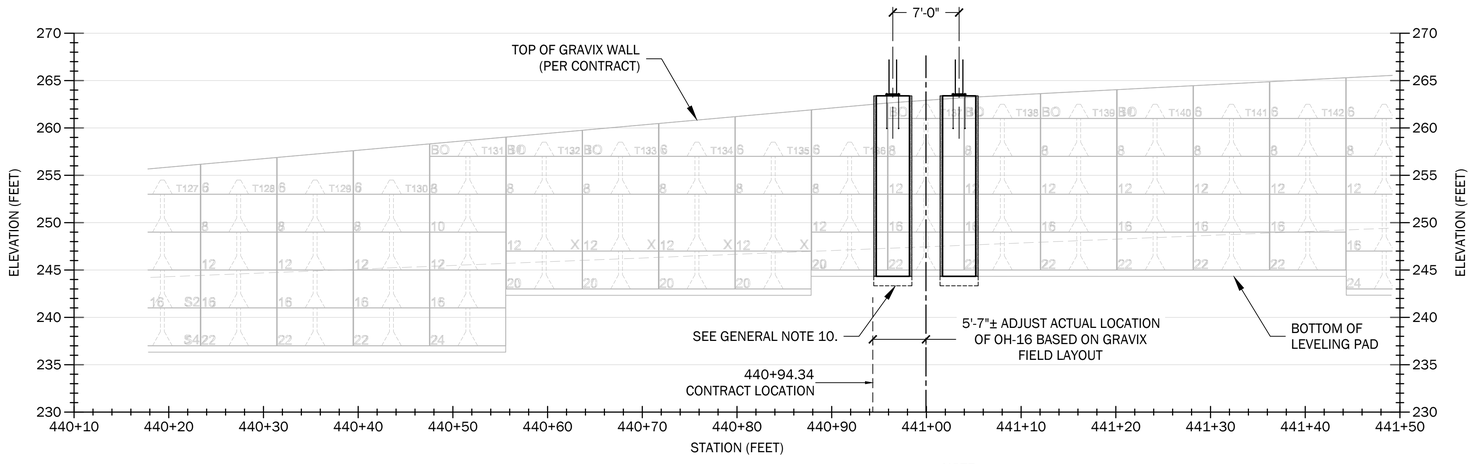

ELEVATION VIEW B

SCALE: 1/8" = 1'-0" S-1

8' 6' 4' 2' 0 8'

GRAPHIC SCALE: 1/8" = 1'-0"

NOTE:
GRAVIX LAYOUT SHOWN PER CONTRACT SHEET RW11 "FRONT FACE OF ELEVATION VIEW" BY ENGINEERS EARTH SOLUTIONS, LLC.

SOUTH CAROLINA PROFESSIONAL ENGINEER No. 39106 ELENA BRONSHTEYN 06-11-2024

NO.	DATE	BY	ISSUE / DESCRIPTION

DESIGNED BY:	JER
DRAWN BY:	TDP
APPROVED BY:	MF
REVISION NO.:	----
DATE:	06/11/2024

GeoEngineers
WWW.GEOENGINEERS.COM

PREPARED FOR: ARCHER UNITED JOINT VENTURE

OVERHEAD SIGN 16 (OH-16), RIGHT SIDE, INTERSTATE 26 - STA. 440+94.34
RICHLAND COUNTY, SOUTH CAROLINA - SCDOT PROJECT P039718

SECTION VIEWS

DRAWING NUMBER: S-1

SHEET: 2 OF 3

Plotted: 06/11/2024, 11:36 | jrankin P:\18\18461016\CAD\00\OH16\v0112 S-1 Plan view.dwg

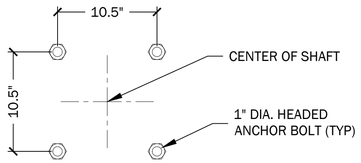

TYPICAL PLAN
ANCHOR BOLT LAYOUT 1

SCALE: 1-1/2" = 1'-0"

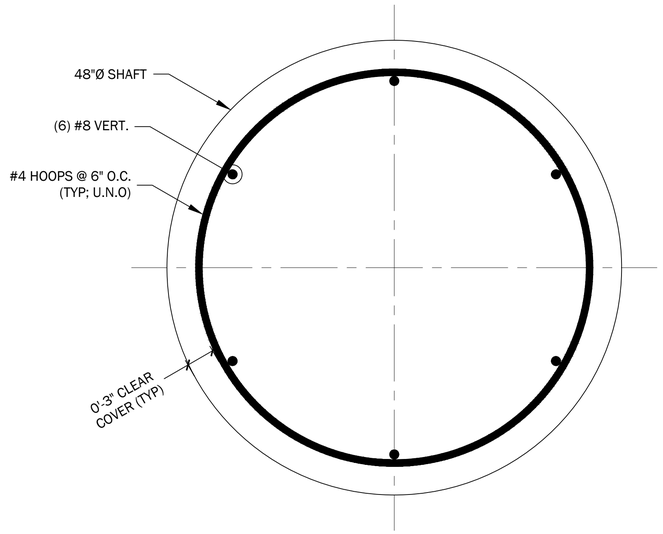

TYPICAL PLAN
SHAFT REINFORCEMENT 2

SCALE: 1-1/2" = 1'-0"

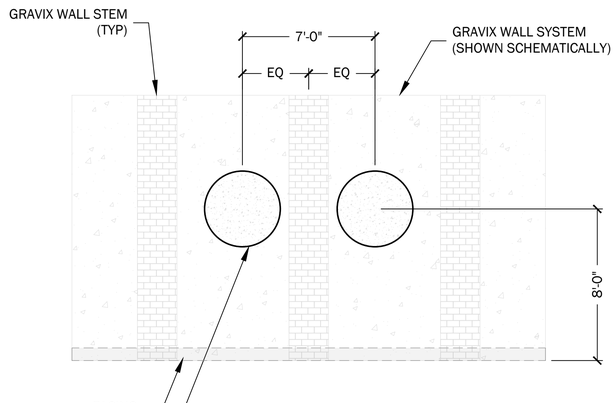

TYPICAL PLAN
SHAFT LAYOUT 3

SCALE: 1/4" = 1'-0"

NOTE:
CENTER SHAFTS AND SIGN STRUCTURE
ABOUT THE MODULAR WALL STEM.

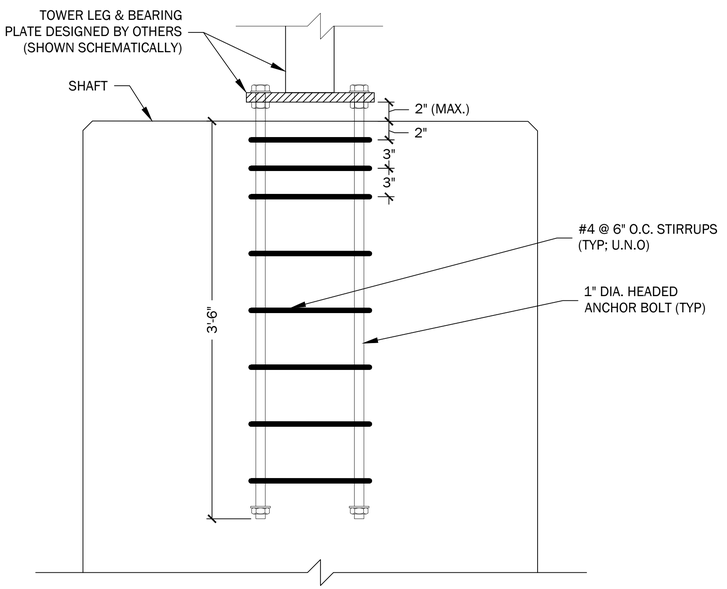

TYPICAL SECTION
ANCHOR BOLT LAYOUT 1A

SCALE: 1-1/2" = 1'-0"

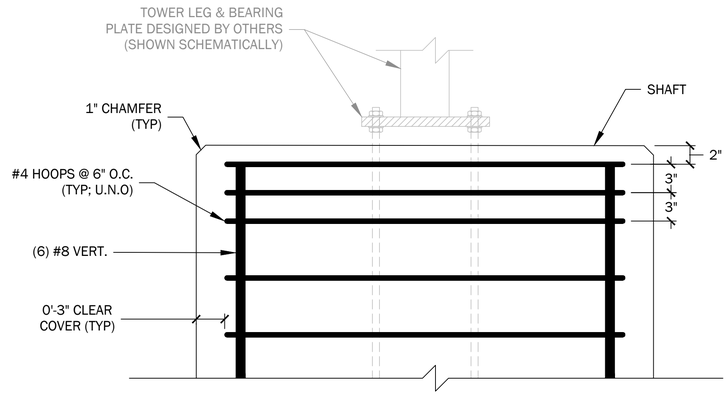

TYPICAL SECTION
SHAFT REINFORCEMENT 2A

SCALE: 1-1/2" = 1'-0"

NOTE:
#4 STIRRUPS AROUND HEADED ANCHOR BOLTS
OBSCURED BY #4 HOOPS. SEE DETAIL 1A.

6" 3" 0 6" 1'
GRAPHIC SCALE: 1 1/2" = 1'-0"

4' 2' 0 4'
GRAPHIC SCALE: 1/4" = 1'-0"

SOUTH CAROLINA
LICENSED PROFESSIONAL ENGINEER
No. 39106
ELENA BRONSHVAG
06-11-2024

NO.	DATE	BY	ISSUE / DESCRIPTION

DESIGNED BY:	JER
DRAWN BY:	TDP
APPROVED BY:	MF
REVISION NO.:	---
DATE:	06/11/2024

GeoEngineers
WWW.GEOENGINEERS.COM

PREPARED FOR: ARCHER UNITED JOINT VENTURE

OVERHEAD SIGN 16 (OH-16), RIGHT SIDE, INTERSTATE 26 - STA. 440+94.34
RICHLAND COUNTY, SOUTH CAROLINA - SCDOT PROJECT P039718

TYPICAL DETAILS

DRAWING NUMBER:
S-2
SHEET: 3 OF 3

Plotted: 06/11/2024, 11:36 | jrankin P:\18\18461016\CAD\00\OH16\w01\4 S-3 TYPICAL DETAILS.dwg

Calculations

Subject: Design foundation for the right side of proposed OH-16. Foundation loads were provided by JV. The proposed foundation will consist of two cast in place, concrete shafts that extend through the backfill of a precast modular wall. The shafts are to bear on / in partially weathered bedrock expected at the base of the proposed wall.

References:

1. PDF file titled "OH-16 Foundation Loading Data". File presents the analyses and design of OH-16 and foundation loading. Design by Walpar and sealed March 19, 2024;
2. PDF file titled "OH-16 Sign Relocation Relevant Plans". File provided by JV and presents sign geometry, MSE wall information, and soil boring logs;
3. AASHTO Standard Specifications for Highway Bridges, 17th Edition - 2002 (17th Ed, 2005);
4. LRFD Specifications for Structural Supports for Highway Signs, Luminaires, and Traffic Signals, 1st Ed., 2015 (Signs);
5. ASCE Minimum Design Loads for Buildings and Other Structures (ASCE 7-05); and
6. American Concrete Institute's "Building Code Requirements for Structural Concrete" (ACI 318-14)

Materials:

Unit weight of reinforced concrete $\gamma_c := 150\ pcf$

Geometry (Ref 2):

Top of shaft elevation (subsequent email with JV) $El_{top} := 263.4\ ft$

Bottom of modular wall / top of partially weathered bedrock $El_{bot} := 245\ ft$

Length of shaft $L_p := El_{top} - El_{bot} = 18.4\ ft$

Foundation loads - Ref 1

(Ref 1, BT4-11/11)
(Attachment B)

Loads and Locations From Structure

Truss DL React (Rd)	10.48 k	Base to Truss Load Dim (H1)	9.65 ft
Upright DL React (Rv)	0.95 k	Base to Upright Load Dim (H2)	5.76 ft
Truss WL React (Rh)	16.29 k		
Upright WL React (Wv)	0.20 k		

Notes
1. There is a moment applied in the transverse direction (perpendicular to travel lane). We assume this moment and lateral load are resisted by the "Left Side" foundation. No transverse lateral load applied to the Right Side foundation.
2. Loads in Ref 1 are based on the "Standard Specifications for Structural Supports for Highway Signs, Luminaires,...", 2013. This reference is based on service level loading (i.e., ASD). As such, our design and analyses are performed using primarily Ref 3, AASHTO 17th Ed.

Axial - compressive (total for both tower legs)

Truss dead load (one end of truss) $R_d := 10.48\ kip$

Upright dead load $R_v := 0.95\ kip$

Total tower load $P_{tot} := R_d + R_v = 11.4\ kip$

Axial load at base of each tower leg (2 legs per tower) $P_a := P_{tot} \div 2 = 5.7\ kip$

Lateral - wind on truss (reax at one end of truss) $R_h := 16.29\ kip$

Lateral - wind on upright (right end) $W_v := 0.2\ kip$

Total lateral load (wind) $V := R_h + W_v = 16.5\ kip$

Height of lateral wind loads:

Truss $H1 := 9.65\ ft$

Upright $H2 := 5.76\ ft$

Total moment transferred to top of shafts (due to wind; service) $M := R_h \cdot H1 + W_v \cdot H2$

$M = 158.4\ kip \cdot ft$

Distance between tower legs $h := 7\ ft$

Resolve longitudinal moment into T/C in tower legs $p := M \div h = 22.6\ kip$

Service level loading (per shaft / tower leg)

Maximum compressive load $P_c := P_a + p = 28.3\ kip$

Maximum tension load $P_t := |P_a - p| = 16.9\ kip$

Maximum lateral load $V_v := V \div 2 = 8.2\ kip$

Geotechnical capacity

Check resistance to uplift

Assumed diameter of shaft and area — $D := 4\ ft$ $A_p := \frac{\pi \cdot D^2}{4} = 12.6\ ft^2$

Weight of shaft (per vertical foot) — $w_p := A_p \cdot \gamma_c = 1.88\ \frac{kip}{ft}$

Minimum length of shaft — $L_p = 18.4\ ft$

Weight of shaft — $W_p := w_p \cdot L_p = 34.7\ kip$

Factored dead load (ASCE 7, LF=0.6) — $W_{p\_f} := 0.6 \cdot W_p = 20.8\ kip$

$W_{p\_f} > P_t = 16.9\ kip$ ∴ Shaft has sufficient weight to resist uplift. Conservatively neglects soil / concrete friction.

Check bearing capacity

Maximum compressive load — $P_c = 28.3\ kip$

Bearing /contact stress — $q := \frac{P_c + W_p}{A_p} = 5\ ksf$

Shaft to bear on partially weathered rock as evidenced by auger refusal on boring logs and N (SPT) values of 50 blows for zero inches of penetration. Shafts will also have significant embedment. By inspection, bearing capacity OK.

Shaft lateral loading

Overload factor and undercapacity factor (Signs, Section C13.6.1.1-1) — $OLF := 2.5$ $UCF := 0.7$

Safety factor — $SF := \frac{OLF}{UCF} = 3.6$

Considering lateral load is due to wind, could use a $LF_w := 1.6$. Use of SF is conservative.

Applied lateral load at top of shaft (moment resolved axially in shaft). Lateral load per shaft. — $V_v = 8.2\ kip$

Ultimate lateral load — $V_F := SF \cdot V_v = 29.4\ kip$

Check rigid vs flexible behavior — $10 \cdot D = 40\ ft > L_p = 18.4\ ft$
∴ Pile will exhibit "rigid" behavior.

Assumed density and soil friction angle of structural fill zone — $\gamma_{fill} := 125\ pcf$ $\phi_{fill} := 34\ deg$

Rankine passive pressure coefficient — $k_p := \tan\left(45\ deg + \frac{\phi_{fill}}{2}\right)^2 = 3.5$

Solve block to find the required minimum embedment length to balance lateral load.

(Signs - Eq. C13.6.1.1-5)

Solve for Trial Values

$L_{req} := 6\ ft$

$L_{req}^{3} - \frac{2 \cdot V_F \cdot L_{req}}{k_p \cdot \gamma_{fill} \cdot D} = 0$

$L := \text{find}(L_{req}) = 5.8\ ft$

Check solution:

Minimum required length $L = 5.8\ ft$

Passive resistance per foot-width of shaft $P_p := \frac{1}{2} \cdot k_p \cdot \gamma_{fill} \cdot L^2 = 7.4\ \frac{kip}{ft}$

Ultimate passive resistance (min. length) $P_u := D \cdot P_p = 29.4\ kip$ $= V_F = 29.4\ kip$ ∴ Ok

Calculate ultimate passive resistance for the provided length

Provided length (min.) $L_p = 18.4\ ft$

Ultimate passive resistance (actual length) $P_{u\_actual} := D \cdot \frac{1}{2} \cdot k_p \cdot \gamma_{fill} \cdot L_p^{2} = 299.4\ kip$

$P_{u\_actual} > V_F = 29.4\ kip$ ∴ Shaft has adequate lateral capacity.

Moment

The moment in the shaft is based on the required embedment length found above. $L = 5.8\ ft$

No applied moment to top of shaft; omit H from Eq. C13.6.1.1-9. $M_{F\_max} := V_F \cdot 0.54 \cdot \sqrt{\frac{V_F}{\gamma_{fill} \cdot D \cdot k_p}} = 64.9\ kip \cdot ft$

Factored demand moment $M_u := M_{F\_max} = 64.9\ kip \cdot ft$

Structural

Diameter of shaft	$D = 4\ ft$
Gross area of shaft	$A_g := \pi \cdot D^2 \div 4 = 12.6\ ft^2$
Estimated length of shaft	$l_c := L_p = 18.4\ ft$
Yield strength of steel	$f_y := 60000\ psi$
Compressive strength (28 day)	$f'_c := 4000\ psi$

Check shaft as plain concrete for flexure and axial

Ignore outer $t_c := 2\ in$ of shaft in following calculations.	$h := D - 2 \cdot t_c = 3.67\ ft$
Area of reduced shaft	$a_g := \frac{\pi \cdot h^2}{4} = 10.6\ ft^2$

Flexure

Resistance factor (ACI 318-14, Table 21.2.1)	$\phi_b := 0.6$
Elastic section modulus of reduced shaft	$S := \frac{\pi \cdot h^3}{32} = 8362.9\ in^3$
Nominal flexure (ACI 318-14, Eq. 14.5.2.1a/b)	$m_{n1} := 5 \cdot \sqrt{f'_c \cdot psi} \cdot S = 220.4\ kip \cdot ft$
	$m_{n2} := 0.85 \cdot f'_c \cdot S = 2369.5\ kip \cdot ft$
Controlling nominal moment	$M_n := min\left(m_{n1}, m_{n2}\right) = 220.4\ kip \cdot ft$
Factored flexural resistance	$\phi_b \cdot M_n = 132.2\ kip \cdot ft$
	$\phi_b \cdot M_n > M_u = 64.9\ kip \cdot ft$
	∴ Section Ok for flexure

Axial compression

Resistance factor (ACI 318-14, Table 21.2.1)	$\phi_p := 0.6$
Nominal required strength (previously calculated)	$P_c = 28.3\ kip$
Use $LF_A := 1.4$ for axial loading. Factored axial demand:	$P_u := LF_A \cdot P_c = 39.7\ kip$
Nominal axial capacity (ACI 318-14, Eq. 14.5.3.1)	$P_n := 0.6 \cdot f'_c \cdot a_g \cdot \left(1 - \left(\frac{l_c}{32 \cdot h}\right)^2\right)$
	$P_n = 3559.5\ kip$
Factored axial resistance	$\phi_p \cdot P_n = 2135.7\ kip$
	$\phi_p \cdot P_n = 2135.7\ kip >> P_u = 39.7\ kip$
	∴ Axial loading OK

Check interaction

ACI 318-14, Table 14.5.4.1

Tension face $\frac{M_u}{S}-\frac{P_u}{a_g}=67\ psi$ < $\phi_b\cdot 5\cdot\sqrt{f'_c\cdot psi}=189.7\ psi$

Compression face $\frac{M_u}{\phi_b\cdot M_n}+\frac{P_u}{\phi_p\cdot P_n}=0.5$ < 1.0

∴ Interaction / combined stresses Ok.

Tension

Applied service level tension load $P_t=16.9\ kip$

Allowable tensile stress in Gr. 60 reinforcement steel (AASHTO 17th, 8.15.2.2) $f_s:=24000\ psi=24\ ksi$

Use $n:=6$ No. 8 bars for longitudinal reinforcement. (Required min, Signs 8.18.1.2 is 6 ea. No. 5s)

Area of bar $A_b:=\frac{\pi\cdot\left(\frac{8}{8}\ in\right)^2}{4}=0.785\ in^2$

Total area of longitudinal steel $A_L:=n\cdot A_b=4.7\ in^2$

Tensile stress in each bar $p_s:=\frac{P_t}{A_L}=3.6\ ksi$

Extend longitudinal bars entire length of shaft; development length Ok by inspection. $f_s > p_s$ ∴ Tensile stress in bar Ok.

Shear

Factored lateral load (found previously) $V_F=29.4\ kip$

Assume No. 4 hoops, No. 8 longitudinal bars, angle between bars = $\alpha:=60\ deg$, and $c_c:=3\ in$

Distance from center of shaft to centroid of bar $d_1:=\frac{D}{2}-c_c-\frac{1}{2}\ in-\frac{1\ in}{2}=20\ in$

Distance from extreme fiber in compression to center of opposite side longitudinal bars. $d:=d_1\cdot\cos\left(\frac{\alpha}{2}\right)+\frac{D}{2}=41.3\ in$

Design shear stress (AASHTO 17th, Eq. 8-3) (conservatively use factored load) $v:=\frac{V_F}{d\cdot D}=14.8\ psi$

Allowable shear stress (AASHTO 17th, text to 8.15.5.2.2) $v_a:=0.95\cdot\sqrt{f'_c\cdot psi}=60.1\ psi$

$v_a > v=14.8\ psi$ ∴ concrete shear capacity Ok.

Reinforcement

Design of shafts per AASHTO 17th Ed., Section 4.6.6.2. This section defers to Section 8 for reinforcement.

Longitudinal steel

Longitudinal steel checked above. Note, shaft diameter has been sized to resist uplift load and not compressive loads. Compressive load can safely be carried entirely by concrete. Therefore, provide at least the minimum steel per AASHTO 17th Ed., 8.18.1.2 (six No. 5 bars).

Spiral reinforcement

Guidance for spiral reinforcement in AASHTO 17th Ed. is more suited to columns.
Provide minimum spiral reinforcement area in accordance with AASHTO LRFD 9th Ed., but, as hoop steel rather than spiral.

Provide W3.9 at a pitch of 6 in per AASHTO LRFD 9th Ed., Section 5.12.9.3.

Area of W3.9 $A_{w3} := 0.039\ in^2$

Use No. 4 hoop bar $A_{hb} := \frac{\pi \cdot \left(\frac{4}{8}\ in\right)^2}{4} = 0.2\ in^2$

$A_{hb} > A_{w3}$ ∴ Ok to use No. 4 hoop bar at s=6".

Connection / anchorage design

Base plate and plate connection to tower legs designed by Walpar. GeoEngineers to design cast in place anchorage to concrete shaft.

Walpar provides for $n := 4$ anchor bolts in each tower leg;
Anchor bolts spaced at $s := 10.5\ in$ c-c (assumed sq. pattern);
Walpar specified rod embedment depth is 42"; and
Walpar based design on $d_{rod} := 1\ in$

GeoEngineers specifies rods to be ASTM F1554, Gr 55 (min.).

Minimum yield stress of rod $F_{yr} := 55\ ksi$

Minimum ultimate tensile strength of rod (ACI 318, Section 17.4.1.2) $F_{uta} := min\left(75\ ksi, 1.9 \cdot F_{yr}, 125\ ksi\right) = 75\ ksi$

Loads (found previously; service level) - ea. tower leg

Maximum tension load $P_t = 16.9\ kip$
Maximum lateral load $V_v = 8.2\ kip$

For concrete analyses and design, increase service loads by $LF_c := 1.6$

Ultimate loads	Per tower leg	Per anchor row	Per anchor
Ultimate tension	$P_u := LF_c \cdot P_t = 27.05\ kip$	$P_{u1} := LF_c \cdot P_t \div 2 = 13.53\ kip$	$P_{u2} := \frac{LF_c \cdot P_t}{n} = 6.76\ kip$
Ultimate shear	$V_u := LF_c \cdot V_v = 13.19\ kip$		

Assumed Condition B (assume supplementary reinforcement not present; conservative).

Bearing area of nut on rod (AISC DG 1, 2nd Ed., Base Plate and Anchor Rod Design, Table 3.2) $A_{brg} := 1.5\ in^2$

Model shaft as a square with equivalent area $b := \sqrt{A_p} = 42.5\ in$

$b' := \frac{b}{2} = 21.3\ in$

Anchor rod and anchorage into shaft are analyzed and designed using commercially available "Tekla Tedds" engineering software. Tedds versions are indicated on the output following this section. Based on results of modeling; proposed anchors are adequate.

GeoEngineers	Project				Job Ref.	
GeoEngineers	Carolina Crossroads Phase 1				18461-016-00	
	Section				Sheet no./rev.	
	OH-16 Sign Foundation (Right Side)				1	
	Calc. by	Date	Chk'd by	Date	App'd by	Date
	JER	6/5/2024	YNB	6/10/24		

ANCHOR BOLT DESIGN

In accordance with ACI318-14

Tedds calculation version 2.1.11

Design summary

Description	Unit	Required	Provided	Util.	Result
Anchor tensile strength	(kips)	6.77	34.07	0.199	PASS
Concrete breakout	(kips)	27.06	65.50	0.413	PASS
Pullout strength	(kips)	6.77	33.60	0.201	PASS
Side face blowout	(kips)	13.53	154.42	0.088	PASS
Anchor shear strength	(kips)	13.20	56.70	0.233	PASS
Shear breakout (front)	(kips)	13.20	20.40	0.647	PASS
Side shear breakout (front)	(kips)	13.20	45.33	0.291	PASS
Anchor pryout	(kips)	13.20	130.99	0.101	PASS
Interaction of forces		1.200	1.060	0.883	PASS

Anchor bolt geometry

Type of anchor bolt	Cast-in headed end bolt anchor
Diameter of anchor bolt	d_a = **1** in
Number of bolts in x direction	N_{boltx} = **2**
Number of bolts in y direction	N_{bolty} = **2**
Total number of bolts	$n_{total} = (N_{boltx} \times 2) + (N_{bolty} - 2) \times 2$ = **4**
Total number of bolts in tension	$n_{tens} = (N_{boltN} \times 2) + (N_{bolty} - 2) \times 2$ = **4**
Spacing of bolts in x direction	s_{boltx} = **10.5** in
Spacing of bolts in y direction	s_{bolty} = **10.5** in
Number of threads per inch	n_t = **8**
Effective cross-sectional area of anchor	$A_{se} = \pi / 4 \times (d_a - 0.9743 \text{ in} / n_t)^2$ = **0.606** in^2
Embedded depth of each anchor bolt	h_{ef} = **42** in

Foundation geometry

Member thickness	h_a = **70** in
Dist center of baseplate to left edge foundation	x_{ce1} = **21.3** in
Dist center of baseplate to right edge foundation	x_{ce2} = **21.3** in
Dist center of baseplate to bot. edge foundation	y_{ce1} = **21.3** in
Dist center of baseplate to top edge foundation	y_{ce2} = **21.3** in

Material details

Minimum yield strength of steel	f_{ya} = **55** ksi
Nominal tensile strength of steel	f_{uta} = **75** ksi
Compressive strength of concrete	f'_c = **4** ksi
Concrete modification factor	λ = **1.00**
Modification factor for cast-in anchor concrete failure	$\lambda_a = 1.0 \times \lambda$= **1.00**

Strength reduction factors

Tension of steel element	$\phi_{t,s}$ = **0.75**
Shear of steel element	$\phi_{v,s}$ = **0.65**
Concrete tension	$\phi_{t,c}$ = **0.70**

Concrete shear	$\phi_{v,c}$ = **0.70**
Concrete tension for pullout	$\phi_{t,cB}$ = **0.70**
Concrete shear for pryout	$\phi_{v,cB}$ = **0.70**

Anchor forces

Number of bolt rows in tension	N_{boltN} = **2**
Axial force in bolts for row 1	N_1 = **13.53** kips
Axial force in bolts for row 2	N_2 = **13.53** kips
Total axial force on bolt group	N_R = **27.06** kips
Maximum axial force to single bolt	$N_{max,s}$ = **6.77** kips
Eccentricity of axial load (from bolt group centroid)	e'_N = **0.00** in
Shear force applied to bolt group	V = **13.20** kips

Steel strength of anchor in tension (17.4.1)

Nominal strength of anchor in tension	$N_{sa} = A_{se} \times f_{uta}$ = **45.43** kips
Steel strength of anchor in tension	$\phi N_{sa} = \phi_{t,s} \times N_{sa}$ = **34.07** kips

PASS - Steel strength of anchor exceeds max tension in single bolt

Check concrete breakout strength of anchor bolt in tension (17.4.2)

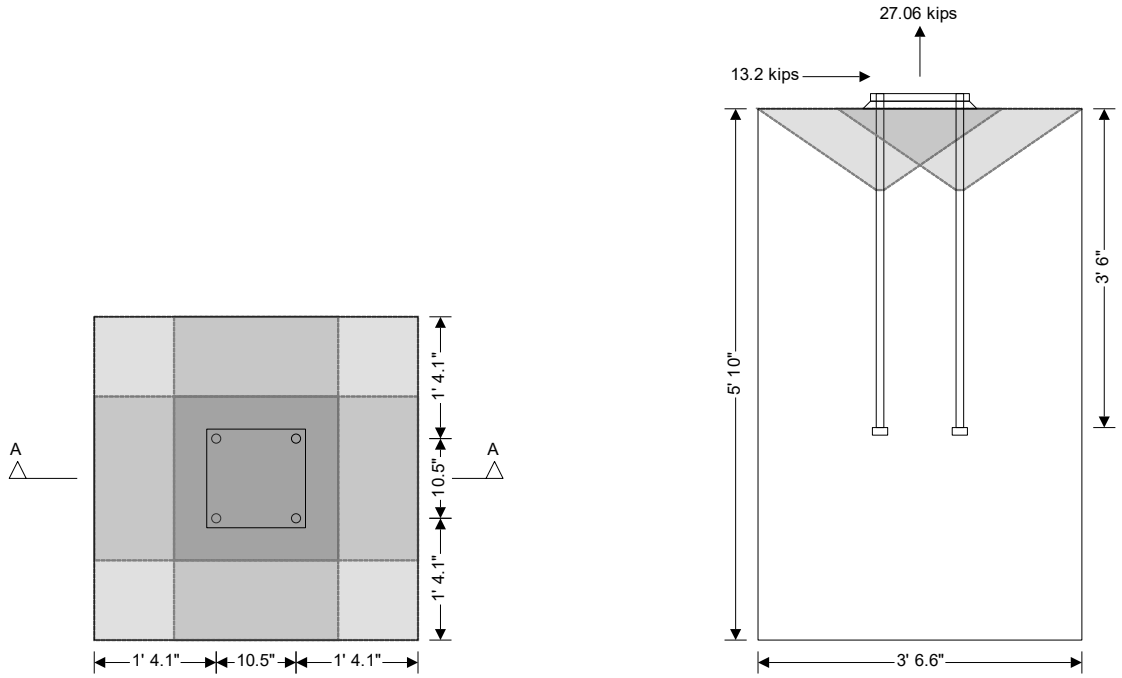

Plan on foundation

Section A-A

Concrete breakout - tension

The anchors are located at less than 1.5h_{ef} from 4 edges. Therefore the effective embedded depth has to be limited to 10.70" in accordance with 17.4.2.3

Limiting embedded depth	$h_{ef,lim}$ = **10.70** in
Coeff for basic breakout strength in tension	k_c = **24**
Breakout strength for single anchor in tension	$N_b = k_c \times \lambda_a \times \sqrt{(f'_c \times 1\ psi)} \times h_{ef,lim}^{1.5} \times 1\ in^{0.5}$ = **53.13** kips
Projected area for groups of anchors	A_{Nc} = **1814.8** in^2
Projected area of a single anchor	$A_{Nco} = 9 \times h_{ef,lim}^2$ = **1030.4** in^2

Min dist center of anchor to edge of concrete	$c_{a,min}$ = **16.05** in
Mod factor for groups loaded eccentrically	$\psi_{ec,N} = \min(1 / (1 + ((2 \times e'_N) / (3 \times h_{ef,lim}))), 1)$ = **1.000**
Modification factor for edge effects	$\psi_{ed,N}$ = 1.0 = **1.000**
Modification factor for no cracking at service loads	$\psi_{c,N}$ = **1.000**
Modification factor for cracked concrete	$\psi_{cp,N}$ = **1.000**
Nominal concrete breakout strength	$N_{cbg} = A_{Nc} / A_{Nco} \times \psi_{ed,N} \times \psi_{c,N} \times \psi_{cp,N} \times N_b$ = **93.57** kips
Concrete breakout strength	$\phi N_{cbg} = \phi_{t,c} \times N_{cbg}$ = **65.50** kips

PASS - Breakout strength exceeds tension in bolts

Pullout strength (17.4.3)

Net bearing area of the head of anchor	A_{brg} = **1.5** in^2
Mod factor for no cracking at service loads	$\psi_{c,P}$ = **1.000**
Pullout strength for single anchor	$N_p = 8 \times A_{brg} \times f'_c$ = **48.00** kips
Nominal pullout strength of single anchor	$N_{pn} = \psi_{c,P} \times N_p$ = **48.00** kips
Pullout strength of single anchor	$\phi N_{pn} = \phi_{t,cB} \times N_{pn}$ = **33.60** kips

PASS - Pullout strength of single anchor exceeds maximum axial force in single bolt

Side face blowout strength (D.5.4)

The sideface blowout will be checked in the x and y directions as the edge distances for the bolts in both directions are less than h_{ef} / 2.5

Check x direction

Axial force in group of anchors	$N_{sfb} = (N_1)$ = **13.53** kips
Edge distance	c_{a1} = **16.05** in
	c_{a2} = **16.05** in
Side face blowout strength for single anchor	$N_{sb} = (160 \times c_{a1} \times \sqrt{(A_{brg})} \times \lambda_a \times \sqrt{(f'_c \times 1psi)})$ = **198.92** kips
Distance between outer anchors along the edge	$s = (N_{bolty}-1) \times s_{bolty}$ = **10.5** in
Nom side face blowout strength multiple anchors	$N_{sbg} = (1 + s / (6 \times c_{a1})) \times N_{sb}$ = **220.61** kips
Side face blowout strength for multiple anchors	$\phi N_{sbg} = \phi_{t,c} \times N_{sbg}$ = **154.42** kips

PASS - Sideface blowout strength exceeds tension in bolts

Check y direction

Axial force in group of anchors	$N_{sfb} = N_1 / N_{bolty} + N_2 / N_{bolty}$ = **13.53** kips
Edge distance	c_{a1} = **16.05** in
	c_{a2} = **16.05** in
Side face blowout strength for single anchor	$N_{sb} = (160 \times c_{a1} \times \sqrt{(A_{brg})} \times \lambda_a \times \sqrt{(f'_c \times 1psi)})$ = **198.92** kips
Distance between outer anchors along the edge	$s = (N_{boltN}-1) \times s_{boltx}$ = **10.5** in
Nom side face blowout strength multiple anchors	$N_{sbg} = (1 + s / (6 \times c_{a1})) \times N_{sb}$ = **220.61** kips
Side face blowout strength for multiple anchors	$\phi N_{sbg} = \phi_{t,c} \times N_{sbg}$ = **154.42** kips

PASS - Sideface blowout strength exceeds tension in bolts

Steel strength of anchor in shear (17.5.1)

Built-up grout pads are used so nominal strength will be multiplied by 0.8 (17.5.1.3)

Effective number of anchors in shear	N_{boltV} = **4**
Nom strength of anchor in shear	$V_{sa} = 0.8 \times N_{boltV} \times 0.6 \times A_{se} \times f_{uta}$ = **87.23** kips
Steel strength of anchor in shear	$\phi V_{sa} = \phi_{v,s} \times V_{sa}$ = **56.70** kips

PASS - Steel strength of anchor exceeds shear in bolts

GeoEngineers	Project				Job Ref.	
GeoEngineers	Carolina Crossroads Phase 1				18461-016-00	
	Section				Sheet no./rev.	
	OH-16 Sign Foundation (Right Side)				4	
	Calc. by	Date	Chk'd by	Date	App'd by	Date
	JER	6/5/2024	YNB	6/10/24		

Concrete breakout strength in shear perpendicular to edge - Case 2. All shear resisted by rear bolts (17.5.2)

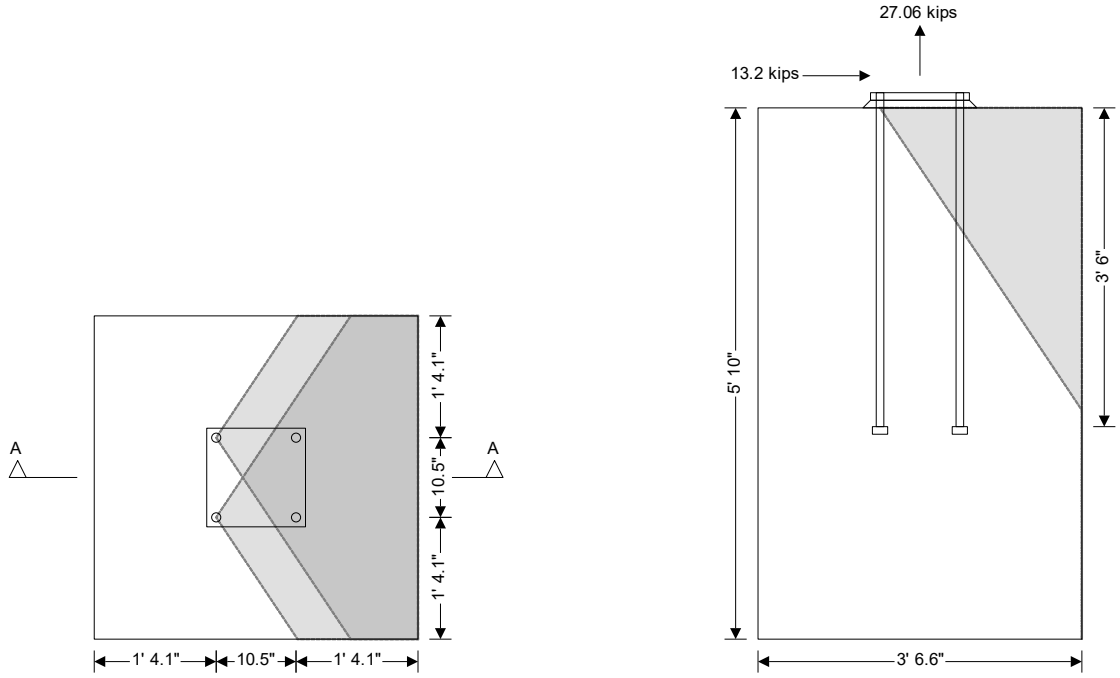

Plan on foundation

Section A-A

Concrete breakout - shear

Applied shear	V_{app} = V = **13.20** kips
Edge distance x for shear near corner	c_{a1} = **26.55** in
Edge distance y for shear near corner	c_{a2} = min(y_{ce1}, y_{ce2}) - (((N$_{bolty}$ - 1)/2) × s_{bolty}) = **16.05** in
Load bearing length of anchor	l_e = min(h_{ef}, 8 × d_a) = **8** in
Basic concrete breakout strength	V_{b1} = 7 × (l_e / d_a)$^{0.2}$ × √(d_a) × λ_a × √(f'$_c$ × 1psi) × (c_{a1})$^{1.5}$ = **91.80** kips
	V_{b2} = 9 × λ_a × √(f'$_c$ × 1psi × 1 in) × (c_{a1})$^{1.5}$ = **77.87** kips
Basic concrete breakout strength	V_b = Min(V_{b1}, V_{b2}) = **77.87** kips
Projected area of a single anchor	A_{Vco} = 4.5 × c_{a1}^2 = **3172.1** in^2
Projected area of a group of anchors	A_{Vc} = **1696.5** in^2
Mod factor for edge effect	$\psi_{ed,V}$ = 0.7 + 0.3 × c_{a2} / (1.5 × c_{a1}) = **0.821**
Eccentricity of loading	e'$_V$ = **0** in
Modification factor of eccentric loading	$\psi_{ec,V}$ = min(1, 1 / (1 + ((2 × e'$_V$) / (3 × c_{a1})))) = **1.000**
Modification factor for cracking	$\psi_{c,V}$ = **1.000**
Modification factor for edge distance	$\psi_{h,V}$ = 1.0 = **1.000**
Nominal concrete break out strength in shear	V_{cbg} = A_{Vc} / A_{Vco} × $\psi_{ec,V}$ × $\psi_{ed,V}$ × $\psi_{c,V}$ × $\psi_{h,V}$ × V_b = **34.19** kips
Concrete break out strength in shear	ϕV_{cbg} = $\phi_{v,c}$ × V_{cbg} = **23.93** kips

PASS - Shear breakout perpendicular to edge strength exceeds shear in bolts

GeoEngineers	Project				Job Ref.	
GeoEngineers	Carolina Crossroads Phase 1				18461-016-00	
	Section				Sheet no./rev.	
	OH-16 Sign Foundation (Right Side)				5	
	Calc. by	Date	Chk'd by	Date	App'd by	Date
	JER	6/5/2024	YNB	6/10/24		

Concrete breakout strength in shear perpendicular to edge - Case 3. All shear resisted by front bolts (17.5.2)

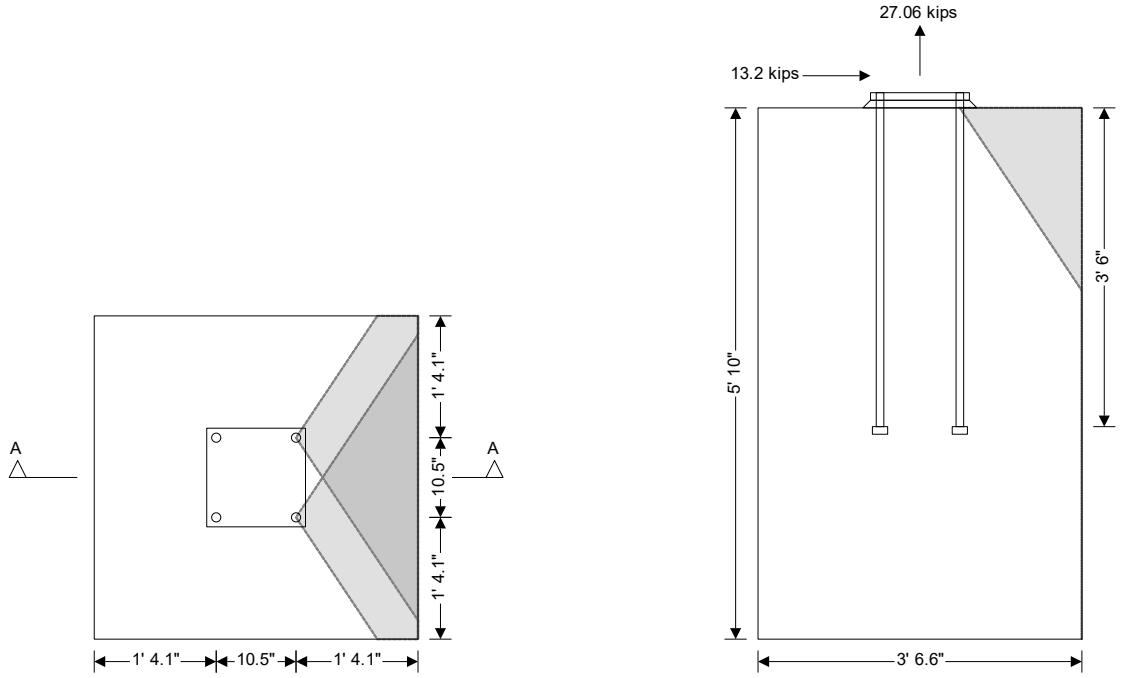

Plan on foundation

Section A-A

Concrete breakout - shear

Applied shear	$V_{app} = V =$ **13.20** kips
Edge distance x for shear near corner	$c_{a1} =$ **16.05** in
Edge distance y for shear near corner	$c_{a2} = \min(y_{ce1}, y_{ce2}) - (((N_{bolty} - 1)/2) \times s_{bolty}) =$ **16.05** in
Load bearing length of anchor	$l_e = \min(h_{ef}, 8 \times d_a) =$ **8** in
Basic concrete breakout strength	$V_{b1} = 7 \times (l_e / d_a)^{0.2} \times \sqrt{(d_a)} \times \lambda_a \times \sqrt{(f'_c \times 1psi)} \times (c_{a1})^{1.5} =$ **43.15** kips
	$V_{b2} = 9 \times \lambda_a \times \sqrt{(f'_c \times 1psi \times 1\ in)} \times (c_{a1})^{1.5} =$ **36.60** kips
Basic concrete breakout strength	$V_b = Min(V_{b1}, V_{b2}) =$ **36.60** kips
Projected area of a single anchor	$A_{Vco} = 4.5 \times c_{a1}^2 =$ **1159.2** in^2
Projected area of a group of anchors	$A_{Vc} =$ **1025.6** in^2
Mod factor for edge effect	$\psi_{ed,V} = 0.7 + 0.3 \times c_{a2} / (1.5 \times c_{a1}) =$ **0.900**
Eccentricity of loading	$e'_V =$ **0** in
Modification factor of eccentric loading	$\psi_{ec,V} = \min(1, 1 / (1 + ((2 \times e'_V) / (3 \times c_{a1})))) =$ **1.000**
Modification factor for cracking	$\psi_{c,V} =$ **1.000**
Modification factor for edge distance	$\psi_{h,V} = 1.0 =$ **1.000**
Nominal concrete break out strength in shear	$V_{cbg} = A_{Vc} / A_{Vco} \times \psi_{ec,V} \times \psi_{ed,V} \times \psi_{c,V} \times \psi_{h,V} \times V_b =$ **29.14** kips
Concrete break out strength in shear	$\phi V_{cbg} = \phi_{v,c} \times V_{cbg} =$ **20.40** kips

PASS - Shear breakout perpendicular to edge strength exceeds shear in bolts

GeoEngineers	Project				Job Ref.	
GeoEngineers	Carolina Crossroads Phase 1				18461-016-00	
	Section				Sheet no./rev.	
	OH-16 Sign Foundation (Right Side)				6	
	Calc. by	Date	Chk'd by	Date	App'd by	Date
	JER	6/5/2024	YNB	6/10/24		

Concrete breakout strength in shear parallel to edge - Case 2. All shear resisted by rear bolts (parallel to edge - Case 2. All shear resisted by rear bolts)

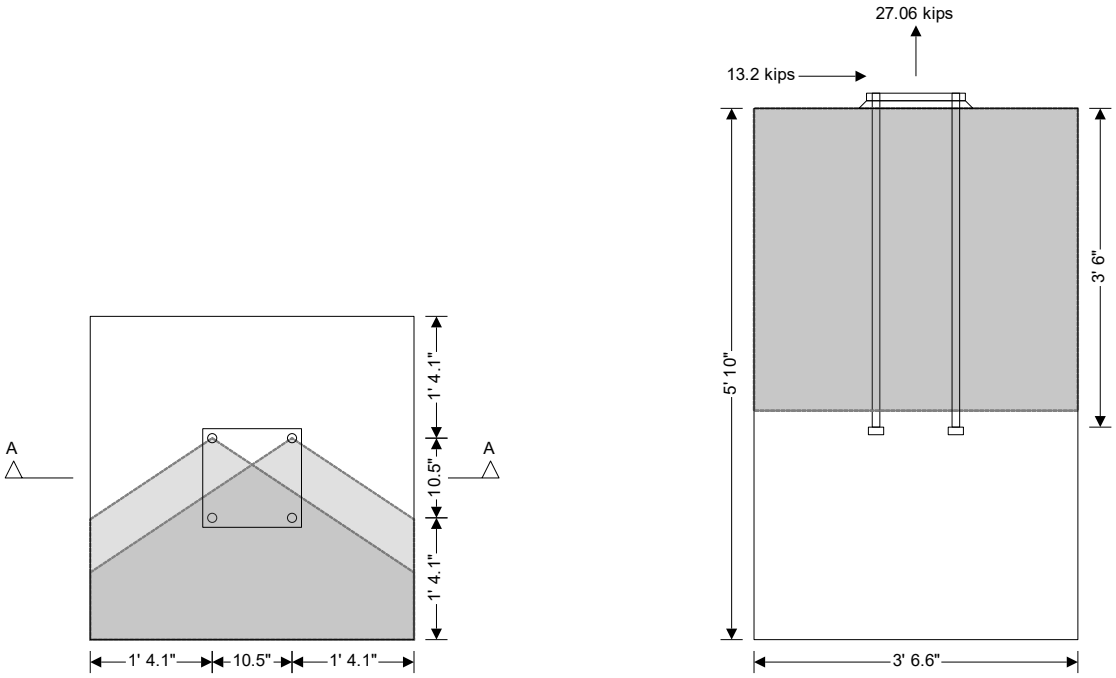

Plan on foundation

Section A-A

Concrete breakout - side shear

Applied shear	$V_{app} = V =$ **13.20** kips
Edge distance x for shear near corner	$c_{a1,p} =$ **26.55** in
Edge distance y for shear near corner	$c_{a2,p} = \min(x_{ce1}, x_{ce2}) - (((N_{boltx} - 1)/2) \times s_{boltx}) =$ **16.05** in
Load bearing length of anchor	$l_e = \min(h_{ef}, 8 \times d_a) =$ **8** in
Basic concrete breakout strength	$V_{b,p1} = 7 \times (l_e / d_a)^{0.2} \times \sqrt{(d_a)} \times \lambda_a \times \sqrt{(f'_c \times 1psi)} \times (c_{a1,p})^{1.5} =$ **91.80** kips
	$V_{b,p2} = 9 \times \lambda_a \times \sqrt{(f'_c \times 1psi \times 1in)} \times (c_{a1,p})^{1.5} =$ **77.87** kips
Basic concrete breakout strength	$V_{b,p} = \text{Min}(V_{b,p1}, V_{b,p2}) =$ **77.87** kips
Projected area of a single anchor	$A_{Vco,p} = 4.5 \times c_{a1,p}^2 =$ **3172.1** in^2
Projected area of a group of anchors	$A_{Vc,p} =$ **1696.5** in^2
Mod factor for edge effect	$\psi_{ed,V,p} =$ **1.000**
Eccentricity of loading	$e'_{V,p} =$ **0** in
Modification factor of eccentric loading	$\psi_{ec,V,p} = \min(1, 1 / (1 + ((2 \times e'_{V,p}) / (3 \times c_{a1,p})))) =$ **1.000**
Modification factor for cracking	$\psi_{c,V} =$ **1.000**
Modification factor for edge distance	$\psi_{h,V,p} = 1.0 =$ **1.000**
Nominal concrete break out strength in shear	$V_{cbg,p} = 2 \times A_{Vc,p} / A_{Vco,p} \times \psi_{ec,V,p} \times \psi_{ed,V,p} \times \psi_{c,V} \times \psi_{h,V,p} \times V_{b,p} =$ **83.30** kips
Concrete break out strength in shear	$\phi V_{cbg,p} = \phi_{v,c} \times V_{cbg,p} =$ **58.31** kips

PASS - Shear breakout strength parallel to edge exceeds shear in bolts

GeoEngineers	Project				Job Ref.	
	Carolina Crossroads Phase 1				18461-016-00	
	Section				Sheet no./rev.	
	OH-16 Sign Foundation (Right Side)				7	
	Calc. by	Date	Chk'd by	Date	App'd by	Date
	JER	6/5/2024	YNB	6/10/24		

Concrete breakout strength in shear parallel to edge - Case 3. All shear resisted by front bolts (parallel to edge - Case 3. All shear resisted by front bolts)

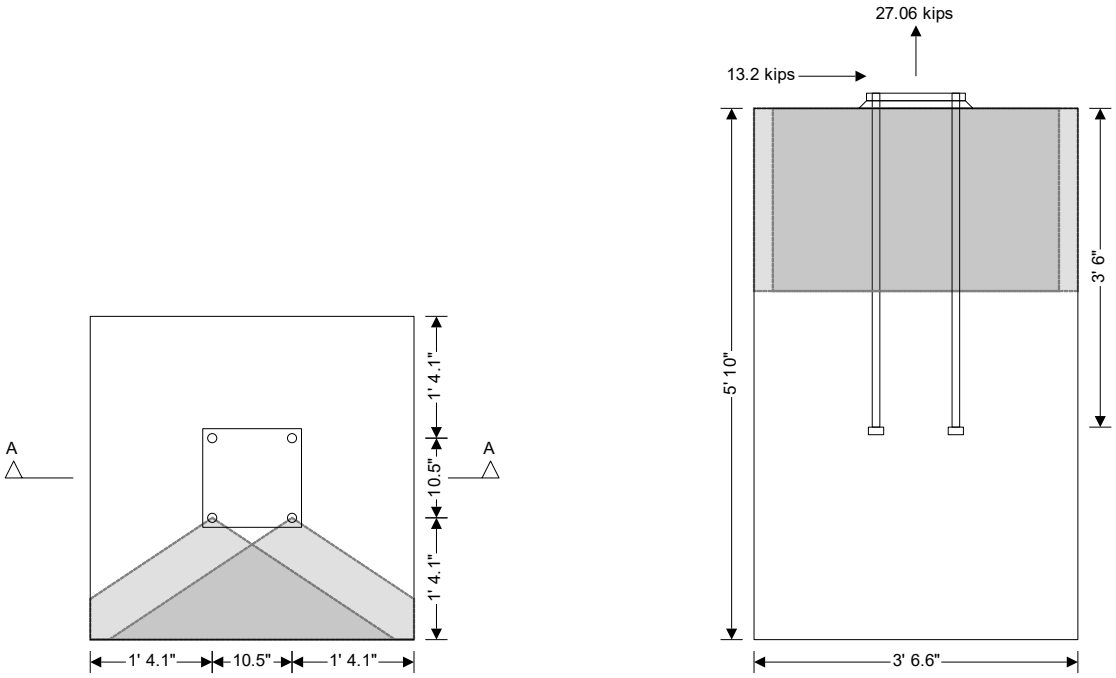

Plan on foundation

Section A-A

Concrete breakout - side shear

Applied shear	V_{app} = V = **13.20** kips
Edge distance x for shear near corner	$c_{a1,p}$ = **16.05** in
Edge distance y for shear near corner	$c_{a2,p}$ = min(x_{ce1}, x_{ce2}) - (((N_{boltx} - 1)/2) × s_{boltx}) = **16.05** in
Load bearing length of anchor	l_e = min(h_{ef}, 8 × d_a) = **8** in
Basic concrete breakout strength	$V_{b,p1}$ = 7 × (l_e / d_a)$^{0.2}$ × √(d_a) × λ_a × √(f'$_c$ × 1psi) × ($c_{a1,p}$)$^{1.5}$ = **43.15** kips
	$V_{b,p2}$ = 9 × λ_a × √(f'$_c$ × 1psi× 1in) × ($c_{a1,p}$)$^{1.5}$ = **36.60** kips
Basic concrete breakout strength	$V_{b,p}$ = Min($V_{b,p1}$, $V_{b,p2}$) = **36.60** kips
Projected area of a single anchor	$A_{Vco,p}$ = 4.5 × $c_{a1,p}^2$ = **1159.2** in^2
Projected area of a group of anchors	$A_{Vc,p}$ = **1025.6** in^2
Mod factor for edge effect	$\psi_{ed,V,p}$ = **1.000**
Eccentricity of loading	e'$_{V,p}$ = **0** in
Modification factor of eccentric loading	$\psi_{ec,V,p}$ = min(1, 1 / (1 + ((2 × e'$_{V,p}$) / (3 × $c_{a1,p}$)))) = **1.000**
Modification factor for cracking	$\psi_{c,V}$ = **1.000**
Modification factor for edge distance	$\psi_{h,V,p}$ = 1.0 = **1.000**
Nominal concrete break out strength in shear	$V_{cbg,p}$ = 2 × $A_{Vc,p}$ / $A_{Vco,p}$ × $\psi_{ec,V,p}$ × $\psi_{ed,V,p}$ × $\psi_{c,V}$ × $\psi_{h,V,p}$ × $V_{b,p}$ = **64.76** kips
Concrete break out strength in shear	$\phi V_{cbg,p}$ = $\phi_{v,c}$ × $V_{cbg,p}$ = **45.33** kips
	PASS - Shear breakout strength parallel to edge exceeds shear in bolts

Pryout strength of anchor in shear (17.5.3)

Coefficient of pryout strength	k_{cp} = **2.0**
Nominal pryout strength of anchor in shear	V_{cpg} = k_{cp} × N_{cbg} = **187.14** kips
Pryout strength of anchor in shear	ϕV_{cpg} = $\phi_{v,cB}$ × V_{cpg} = **130.99** kips

PASS - Pryout strength of anchor exceeds shear in bolts

Interaction of tensile and shear forces

Critical design strength in tension	$\phi N_n = \phi N_{cbg}$ = **65.50** kips
Critical applied tensile force	$N_{ua} = N_R$ = **27.06** kips
	$N_{ua} / \phi N_n$ = **0.413**
Critical design strength in shear	$\phi V_n = \phi V_{cbg,f}$ = **20.40** kips
Critical applied shear force	V_{ua} = abs(V) = **13.20** kips
	$V_{ua} / \phi V_n$ = **0.647**

$V_{ua} / \phi V_n > 0.2$ and $N_{ua} / \phi N_n > 0.2$,
Interaction check is in accordance with 17.6.3 requirements

Interaction	$I_b = N_{ua} / \phi N_n + V_{ua} / \phi V_n$ = **1.060**

PASS - interaction of forces is less than or equal to 1.2

Attachment A

FED. RD. DIV. NO.	STATE	COUNTY	PROJECT ID	ROUTE NO.	SHEET NO.
3	S.C.	LEXINGTON	P039718	I-26	S12

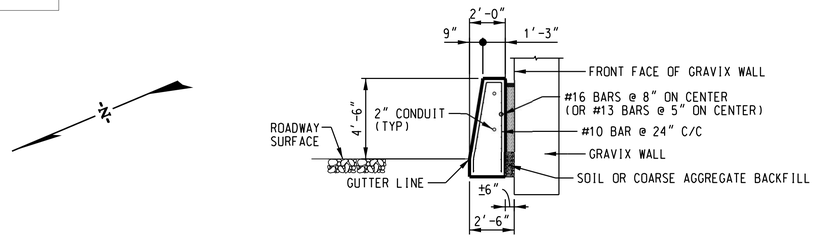

RIGID BARRIER DETAIL

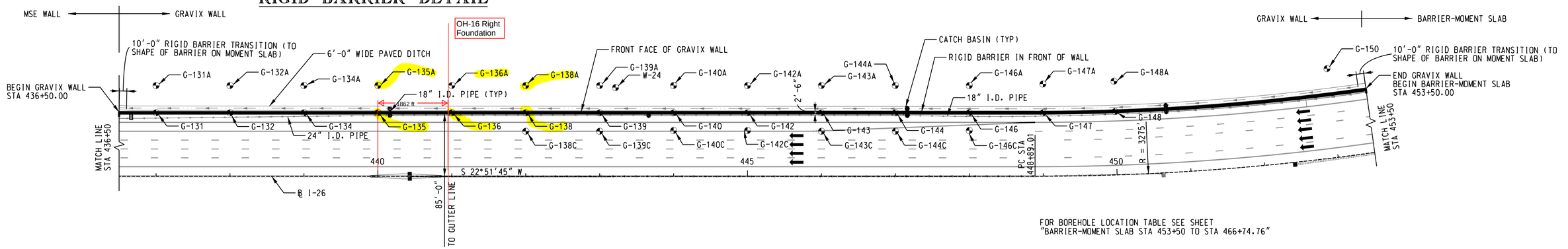

FOR BOREHOLE LOCATION TABLE SEE SHEET "BARRIER-MOMENT SLAB STA 453+50 TO STA 466+74.76"

PLAN

STATION	436+50	437+00	437+50	438+00	438+50	439+00	439+50	440+00	440+50	441+00	441+50	442+00	442+50	443+00	443+50	444+00	444+50	445+00	445+50	446+00	446+50	447+00	447+50	448+00	448+50	449+00	449+50	450+00	450+50	451+00	451+50	452+00	452+50	453+00	453+50
GRAVIX TOP ELEVATION	232.389	236.341	240.147	243.952	246.499	249.046	251.593	254.140	258.596	263.052	265.649	268.247	269.703	271.159	272.614	274.070	275.307	276.545	277.782	279.020	280.257	281.495	282.061	282.627	283.193	283.760	285.542	287.324	289.106	290.889	292.174	293.459	294.848	296.237	297.626
GUTTER LINE ELEVATION	229.526	231.544	233.549	235.554	237.547	239.540	241.520	243.500	245.473	247.445	249.454	251.464	253.520	255.576	257.652	259.727	261.803	263.878	265.940	268.002	269.949	271.896	273.708	275.519	277.045	278.571	279.714	281.236	282.919	284.603	286.286	287.969	289.653	291.336	293.020

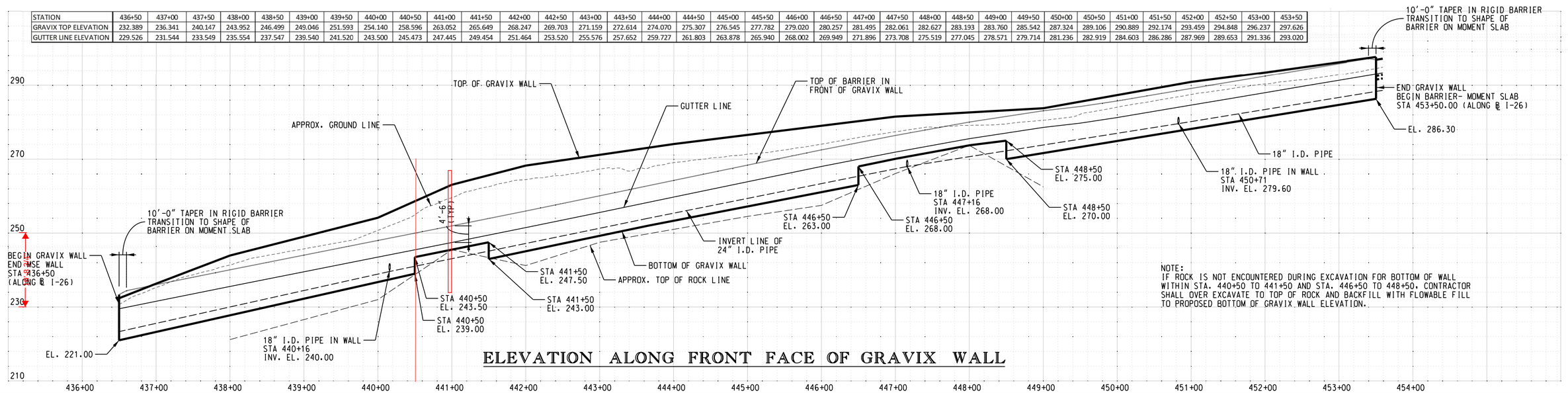

NOTE:
IF ROCK IS NOT ENCOUNTERED DURING EXCAVATION FOR BOTTOM OF WALL WITHIN STA. 440+50 TO 441+50 AND STA. 446+50 TO 448+50, CONTRACTOR SHALL OVER EXCAVATE TO TOP OF ROCK AND BACKFILL WITH FLOWABLE FILL TO PROPOSED BOTTOM OF GRAVIX WALL ELEVATION.

ELEVATION ALONG FRONT FACE OF GRAVIX WALL

ARCHER UNITED JOINT VENTURE

INFRASTRUCTURE CONSULTING & ENGINEERING

SOUTH CAROLINA PROFESSIONAL ENGINEER No. 26987 CHARLESTON REGION

SOUTH CAROLINA INFRASTRUCTURE CONSULTING & ENGINEERING, PLLC CERTIFICATE OF AUTHORIZATION

2022.06.02 09:04:08-04'00'

REV.NO.	BY	CHK'D.	DATE	DESCRIPTION OF REVISION
4				
3				
2				
1				
0	RAJ	JPF	06-02-22	RELEASED FOR CONSTRUCTION

SOUTH CAROLINA DEPARTMENT OF TRANSPORTATION

WALL "2B" - SEGMENT 2
GRAVIX WALL
STA 436+50 TO STA 453+50

CAROLINA CROSSROADS PHASE 1

Z:\Projects\20-6\CCR Ph I\Structures\03_Rdwy Structures\Segment 2\Retaining Walls\WallB\WALL 2B-GRAVIX-REV.dgn

6/2/2022

FED. RD. DIV. NO.	STATE	COUNTY	PROJECT ID	ROUTE NO.	SHEET NO.
3	S.C.	LEXINGTON	P039718	I-26	S30

INFRASTRUCTURE CONSULTING & ENGINEERING

Project ID:	P039718	**County:**	Richland	**Boring No.:**	G-134
Site Description:	Carolina Crossroads Phase 1 - Segment 2			**Route:**	I-26
Driller:	D. Joynes	**Boring Location:**	439+00	**Offset:**	86 LT
Elev.:	245.4 ft	**Latitude:**	34.01293623	**Longitude:**	-81.10838642
Total Depth:	10.3 ft	**Groundwater:**	TOB	Dry	**24 hr:** Dry
Dynamic Cone Penetrometer Test Procedure:		Sowers and Hedges (1966)			

Elevation (ft)	Depth (ft)	MATERIAL DESCRIPTION
240.4	0.0	**Coastal Plain** Orange and Tan, Dry, Silty SAND (SM) SS-75: NM=5.9% LL=x PI=x PI=5 #200=28.6% (A-2-4)
235.4	10.3	Boring Terminated at 10.3 Feet

Graphic Log	Sample No.	Sample Type	1st 6"	2nd 6"	3rd 6"	4th 6"	DCP-Value
	0.0	SS-39	4	2	3		3
	0.0	SS-70	7	5	3		4
	1.0	SS-71	11	8	11		10
	1.5	SS-72	22	16	13		15
	2.0	SS-73	18	20	15		18
	3.0	SS-74	23	21	22		22
	4.0	SS-76	5	10	12		11
	5.0	SS-76	50/5"	24	50/3"		27
	6.0	SS-77	2	3	2		3
	7.0	SS-78	16	16	30		27
	8.0	SS-79	14	13	50/3"		22
	9.0	SS-80	15	18	30		24
	10.0	SS-81	13	15	12		14

● DCP-VALUE ●
PL X MC O LL X
▲ FINES CONTENT (%)
0 10 20 30 40 50 60 70 80 90

LEGEND

SAMPLER TYPE		DRILLING METHOD	
SS - Split Spoon	DCP Dynamic Cone Penetrometer	HSA - Hollow Stem Auger	RW - Rotary Wash
UD - Undisturbed Sample	CU - Cuttings	CFA - Continuous Flight Augers	RC - Rock Core
AWG - Rock Core, 1-1/8"	CT - Continuous Tube	DC - Driving Casing	

INFRASTRUCTURE CONSULTING & ENGINEERING

Project ID:	P039718	**County:**	Richland	**Boring No.:**	G-135
Site Description:	Carolina Crossroads Phase 1 - Segment 2			**Route:**	I-26
Driller:	D. Joynes	**Boring Location:**	440+00	**Offset:**	86 LT
Elev.:	250.5 ft	**Latitude:**	34.0122229	**Longitude:**	-81.1086269
Total Depth:	0.8 ft	**Groundwater:**	TOB	Dry	**24 hr:** Dry
Dynamic Cone Penetrometer Test Prccedure:		Sowers and Hedges (1966)			

Elevation (ft)	Depth (ft)	MATERIAL DESCRIPTION
245.5	0.0	**Coastal Plain** Brown and Orange, Moist, Sandy Silt 249.7
	0.8	Boring Terminated at 0.8 Feet

Graphic Log	Sample No.	Sample Type	1st 6"	2nd 6"	3rd 6"	4th 6"	DCP-Value
	0.0	SS-67	6	4	4		4
	0.5	SS-68	18	8	7		8

● DCP-VALUE ●
PL X MC O LL X
▲ FINES CONTENT (%)
0 10 20 30 40 50 60 70 80 90

LEGEND

SAMPLER TYPE		DRILLING METHOD	
SS - Split Spoon	DCP Dynamic Cone Penetrometer	HSA - Hollow Stem Auger	RW - Rotary Wash
UD - Undisturbed Sample	CU - Cuttings	CFA - Continuous Flight Augers	RC - Rock Core
AWG - Rock Core, 1-1/8"	CT - Continuous Tube	DC - Driving Casing	

INFRASTRUCTURE CONSULTING & ENGINEERING

Project ID:	P039718	**County:**	Richland	**Boring No.:**	G-136
Site Description:	Carolina Crossroads Phase 1 - Segment 2			**Route:**	I-26
Driller:	D. Joynes	**Boring Location:**	441+00	**Offset:**	86 LT
Elev.:	259.3 ft	**Latitude:**	34.0124893	**Longitude:**	-81.1087548
Total Depth:	3.2 ft	**Groundwater:**	TOB	Dry	**24 hr:** Dry
Dynamic Cone Penetrometer Test Procedure:		Sowers and Hedges (1966)			

Elevation (ft)	Depth (ft)	MATERIAL DESCRIPTION
254.3	0.0	**Coastal Plain** Brown and Orange, Dry, Silty, Clayey SAND (SC-SM) SS-65: NM=5.6% LL=21 PI=16 PI=5 #200=34.5% (A-2-4)
		256
249.3	3.2	Boring Terminated at 3.2 Feet

Graphic Log	Sample No.	Sample Type	1st 6"	2nd 6"	3rd 6"	4th 6"	DCP-Value
	0.0	SS-61	7	4	4		4
	0.5	SS-62	9	5	5		5
	1.0	SS-63	24	13	14		14
	1.5	SS-64	15	13	14		14
	2.0	SS-65	23	21	19		20
	3.0	SS-66	18	30	50/3"		30

● DCP-VALUE ●
PL X MC O LL X
▲ FINES CONTENT (%)
0 10 20 30 40 50 60 70 80 90

LEGEND

SAMPLER TYPE		DRILLING METHOD	
SS - Split Spoon	DCP Dynamic Cone Penetrometer	HSA - Hollow Stem Auger	RW - Rotary Wash
UD - Undisturbed Sample	CU - Cuttings	CFA - Continuous Flight Augers	RC - Rock Core
AWG - Rock Core, 1-1/8"	CT - Continuous Tube	DC - Driving Casing	

INFRASTRUCTURE CONSULTING & ENGINEERING

Project ID:	P039718	**County:**	Richland	**Boring No.:**	G-138
Site Description:	Carolina Crossroads Phase 1 - Segment 2			**Route:**	I-26
Driller:	D. Joynes	**Boring Location:**	442+00	**Offset:**	86 LT
Elev.:	264.1 ft	**Latitude:**	34.0122155	**Longitude:**	-81.1088271
Total Depth:	4.5 ft	**Groundwater:**	TOB	Dry	**24 hr:** Dry
Dynamic Cone Penetrometer Test Procedure:		Sowers and Hedges (1966)			

Elevation (ft)	Depth (ft)	MATERIAL DESCRIPTION
259.1	0.0	**Coastal Plain** Red and Brown, Moist, Clayey SAND (SC) SS-54: NM=13.7% LL=28 PI=14 PI=14 #200=32.2% (A-2-6)
254.1	1.5	Brown and Tan, Dry, Clayey SAND (SC) SS-59: NM=12% LL=44 PI=22 PI=22 #200=46.5% (A-7-6)
		259.6
	4.5	Boring Terminated at 4.5 Feet

Graphic Log	Sample No.	Sample Type	1st 6"	2nd 6"	3rd 6"	4th 6"	DCP-Value
	0.0	SS-54	3	2	2		2
	0.5	SS-55	5	4	4		4
	1.0	SS-56	17	11	10		11
	1.5	SS-57	12	8	7		8
	2.0	SS-58	14	7	8		8
	3.0	SS-59	22	18	11		15
	4.0	SS-60	7	13	16		15

● DCP-VALUE ●
PL X MC O LL X
▲ FINES CONTENT (%)
0 10 20 30 40 50 60 70 80 90

LEGEND

SAMPLER TYPE		DRILLING METHOD	
SS - Split Spoon	DCP Dynamic Cone Penetrometer	HSA - Hollow Stem Auger	RW - Rotary Wash
UC - Undisturbed Sample	CU - Cuttings	CFA - Continuous Flight Augers	RC - Rock Core
AWG - Rock Core, 1-1/8"	CT - Continuous Tube	DC - Driving Casing	

INFRASTRUCTURE CONSULTING & ENGINEERING

Project ID:	P039718	**County:**	Richland	**Boring No.:**	G-134 (A)
Site Description:	Carolina Crossroads Phase 1 - Segment 2			**Route:**	I-26
Eng./Geo.:	CM & NM	**Boring Location:**	439+00	**Offset:**	123 LT
Elev.:	254.8 ft	**Latitude:**	34.01293623	**Longitude:**	-81.10838642
Total Depth:	25.8 ft	**Soil Depth:**	25.8 ft	**Core Depth:**	NA ft
Bore Hole Diameter (in):	2.25	**Sampler Configuration**		**Liner Required:**	Y (N)
Drill Machine:	D-50 #1975	**Drill Method:**	HSA	**Hammer Type**	Automatic
Core Size:	NA	**Driller:**	M. Brown	**Groundwater:**	TOB Dry

Date Started: 7/20/2021
Date Completed: 7/20/2021
Alignment: I26RA1P
Liner Used: Y (N)
Energy Ratio: 86%
24HR FIAD

Elevation (ft)	Depth (ft)	MATERIAL DESCRIPTION
249.8	0.0	**Coastal Plain** Orange, Dry, Medium Dense, Silty Sand
	2.0	Orange, Dry, Hard, Sandy Fat CLAY (CH) SS-11: NM=15.2% LL=52 PL=18 PI=34 #200=56.6% (A-7-6)
239.8	8.0	**Residual** Tan and Light Orange, Dry, Medium Dense to Dense, Saprolitic, Clayey SAND (SC) SS-12: NM=12.3% LL=42 PL=25 PI=17 #200=39.3% (A-7-6)
234.8	14.8	**Partially Weathered Rock** Granite, Sampled as Gray, Very Dense, Silty Sand
229.8	19.3	**Residual** Tan and Brown, Dry, Medium Dense to Dense, Saprolitic, Silty Sand
	25.8	Boring Terminated at 25.8 Feet

Graphic Log	Sample No.	Sample Type	1st 6"	2nd 6"	3rd 6"	4th 6"	N Value
	0.0	SS-10	10	9	9	10	18
	2.0	SS-11	9	13	23	2	36
	4.0		12	17	20	25	37
	6.0		10	13	18	24	31
	8.0	SS-12	12	12	12	24	24
	14.3		35	50/4"			50/4"
	19.3	SS-13	7	12	22		34
	24.3		8	8	9		17

● SPT N VALUE ●
PL X MC O LL X
▲ FINES CONTENT (%)
◇ RQD (%) ■ REC (%)
0 10 20 30 40 50 60 70 80 90

LEGEND

SAMPLER TYPE		DRILLING METHOD	
SS - Split Spoon	NQ - Rock Core, 1-7/8"	HSA - Hollow Stem Auger	RW - Rotary Wash
UD - Undisturbed Sample	CU - Cuttings	CFA - Continuous Flight Augers	RC - Rock Core
AWG - Rock Core, 1-1/8"	CT - Continuous Tube	DC - Driving Casing	

INFRASTRUCTURE CONSULTING & ENGINEERING

Project ID:	P039718	**County:**	Richland	**Boring No.:**	G-135 (A)
Site Description:	Carolina Crossroads Phase 1 - Segment 2			**Route:**	I-26
Eng./Geo.:		**Boring Location:**	440+00	**Offset:**	123 LT
Elev.:	261.3 ft	**Latitude:**	34.01268288	**Longitude:**	-81.10851433
Total Depth:	25.9 ft	**Soil Depth:**	25.9 ft	**Core Depth:**	NA ft
Bore Hole Diameter (in):	2.25	**Sampler Configuration**		**Liner Required:**	Y (N)
Drill Machine:	D-50 #1975	**Drill Method:**	HSA	**Hammer Type**	Automatic
Core Size:	NA	**Driller:**	M. Brown	**Groundwater:**	TOB Dry

Date Started: 7/20/2021
Date Completed: 7/20/2021
Alignment: I26RA1P
Liner Used: Y (N)
Energy Ratio: 86%
24HR FIAD

Elevation (ft)	Depth (ft)	MATERIAL DESCRIPTION
256.3	0.3	Asphalt
	2.0	**Coastal Plain** Orange and Tan, Dry to Moist, Medium Dense, Silty Sand
251.3	6.0	Orange, Dry to Moist, Very Stiff to Hard, Sandy Elastic SILT (MH) SS-15: NM=18.3% LL=61 PL=32 PI=29 #200=63.4% (A-7-5)
246.3	8.2	Orange, Dry to Moist, Medium Dense, Silty Sand
241.3		**Residual** Tan and Light Orange, Dry to Moist, Loose to Medium Dense, Saprolitic, Silty Sand
		BOW 236.5
236.3	25.9	Boring Terminated at 25.9 Feet

Graphic Log	Sample No.	Sample Type	1st 6"	2nd 6"	3rd 6"	4th 6"	N Value
	0.3	SS-14	9	16	13	9	29
	2.0	SS-15	9	13	19	27	32
	4.0		5	12	17	21	29
	6.0	SS-16	7	10	11	11	21
	8.0	SS-17	4	4	5	5	9
	14.4		4	5	4		9
	19.4		4	6	7		13
	24.4	SS-18	5	6	7		13

● SPT N VALUE ●
PL X MC O LL X
▲ FINES CONTENT (%)
◇ RQD (%) ■ REC (%)
0 10 20 30 40 50 60 70 80 90

LEGEND

SAMPLER TYPE		DRILLING METHOD	
SS - Split Spoon	NQ - Rock Core, 1-7/8"	HSA - Hollow Stem Auger	RW - Rotary Wash
UD - Undisturbed Sample	CU - Cuttings	CFA - Continuous Flight Augers	RC - Rock Core
AWG - Rock Core, 1-1/8"	CT - Continuous Tube	DC - Driving Casing	

INFRASTRUCTURE CONSULTING & ENGINEERING

Project ID:	P039718	**County:**	Richland	**Boring No.:**	G-136 (A)
Site Description:	Carolina Crossroads Phase 1 - Segment 2			**Route:**	I-26
Eng./Geo.:	CM	**Boring Location:**	441+00	**Offset:**	123 LT
Elev.:	270.6 ft	**Latitude:**	34.01242952	**Longitude:**	-81.10864224
Total Depth:	25.1 ft	**Soil Depth:**	25.0 ft	**Core Depth:**	NA ft
Bore Hole Diameter (in):	2.25	**Sampler Configuration**		**Liner Required:**	Y (N)
Drill Machine:	D-50 #1975	**Drill Method:**	HSA	**Hammer Type**	Automatic
Core Size:	NA	**Driller:**	M. Brown	**Groundwater:**	TOB Dry

Date Started: 7/21/2021
Date Completed: 7/21/2021
Alignment: I26RA1P
Liner Used: Y (N)
Energy Ratio: 86%
24HR FIAD

Elevation (ft)	Depth (ft)	MATERIAL DESCRIPTION
265.6	0.3	Asphalt
	2.0	**Coastal Plain** Light Orange, Dry, Medium Dense, Silty Sand
260.6	7.0	Orange, Dry, Very Stiff to Hard, Sandy Elastic SILT (MH) SS-20: NM=17.8% LL=52 PL=29 PI=23 #200=63.7% (A-7-6)
		Residual Light Orange and Tan, Dry, Loose to Medium Dense, Saprolitic, Silty SAND (SM) SS-22: NM=10.6% LL=35 PL=33 PI=2 #200=36.5% (A-4)
255.6		
250.6	23.2	**Partially Weathered Rock** Granite,
		BOW 245 as Gray, Very Dense, Silty Sand
240.6	25.0	Auger Refusal at 25.1 Feet

Graphic Log	Sample No.	Sample Type	1st 6"	2nd 6"	3rd 6"	4th 6"	N Value
	0.3	SS-19	6	14	12	6	26
	2.0	SS-20	6	9	12	16	21
	4.0		7	17	15	16	32
	6.0	SS-21	9	8	12	10	20
	8.0		8	12	16	9	28
	12.7	SS-22	4	5	6		11
	17.7		8	4	6		10
	22.7	SS-23	2	50/3"			50/3"
	25.0		50/1"				50/1"

● SPT N VALUE ●
PL X MC O LL X
▲ FINES CONTENT (%)
◇ RQD (%) ■ REC (%)
0 10 20 30 40 50 60 70 80 90

LEGEND

SAMPLER TYPE		DRILLING METHOD	
SS - Split Spoon	NQ - Rock Core, 1-7/8"	HSA - Hollow Stem Auger	RW - Rotary Wash
UD - Undisturbed Sample	CU - Cuttings	CFA - Continuous Flight Augers	RC - Rock Core
AWG - Rock Core, 1-1/8"	CT - Continuous Tube	DC - Driving Casing	

INFRASTRUCTURE CONSULTING & ENGINEERING

Project ID:	P039718	**County:**	Richland	**Boring No.:**	G-138 (A)
Site Description:	Carolina Crossroads Phase 1 - Segment 2			**Route:**	I-26
Eng./Geo.:	CM	**Boring Location:**	442+00	**Offset:**	123 LT
Elev.:	275.5 ft	**Latitude:**	34.01217616	**Longitude:**	-81.10877014
Total Depth:	19 ft	**Soil Depth:**	19 ft	**Core Depth:**	NA ft
Bore Hole Diameter (in):	2.25	**Sampler Configuration**		**Liner Required:**	Y (N)
Drill Machine:	D-50 #1975	**Drill Method:**	HSA	**Hammer Type**	Automatic
Core Size:	NA	**Driller:**	M. Brown	**Groundwater:**	TOB Dry

Date Started: 7/21/2021
Date Completed: 7/21/2021
Alignment: I26RA1P
Liner Used: Y (N)
Energy Ratio: 86%
24HR FIAD

Elevation (ft)	Depth (ft)	MATERIAL DESCRIPTION
270.5	0.4	Asphalt
	2.0	**Coastal Plain** Light Orange and White, Dry, Stiff to Hard, Sandy Elastic SILT (MH) SS-26: NM=15.2% LL=54 PL=38 PI=16 #200=56.6 (A-7-5)
265.5	9.0	**Residual** Tan and Light Orange, Dry, Medium Dense, Saprolitic Silty SAND (SM) SS-27: NM=6.9% LL=NP PL=NP PI=NP #200=21.8% (A-1-b)
260.5		TOR (?) 256.5
	19.0	Auger Refusal at 19.0 Feet
255.5		
250.5		
245.5		BOW 244.5
240.5		
235.5		

Graphic Log	Sample No.	Sample Type	1st 6"	2nd 6"	3rd 6"	4th 6"	N Value
	0.4	SS-24	7	8	6		14
	2.0	SS-25	8	15	20	25	35
	4.0		8	11	16	17	37
	6.0	SS-26	5	6	8	9	14
	8.0	SS-27	4	13	10	5	23
	14.0		3	4	19		23
	19.0		50/4"		50/6"		>>50

● SPT N VALUE ●
PL X MC O LL X
▲ FINES CONTENT (%)
◇ RQD (%) ■ REC (%)
0 10 20 30 40 50 60 70 80 90

LEGEND

SAMPLER TYPE		DRILLING METHOD	
SS - Split Spoon	NQ - Rock Core, 1-7/8"	HSA - Hollow Stem Auger	RW - Rotary Wash
UC - Undisturbed Sample	CU - Cuttings	CFA - Continuous Flight Augers	RC - Rock Core
AWG - Rock Core, 1-1/8"	CT - Continuous Tube	DC - Driving Casing	

ARCHER UNITED JOINT VENTURE — UNITED INFRASTRUCTURE CONSULTING & ENGINEERING

FOR INFORMATION ONLY

REV. NO.	BY	CHK'D.	DATE	DESCRIPTION OF REVISION
4				
3				
2				
1				
0	ELW	JPF	06-02-22	RELEASED FOR CONSTRUCTION

SOUTH CAROLINA DEPARTMENT OF TRANSPORTATION

BORING LOGS (10)

CAROLINA CROSSROADS PHASE 1

Z:\Projects\20-6\CCR Ph 1\Structures\03_Rdwy Structures\Segment 2\Boring Logs\BORING LOGS (8).dgn

6/1/2022

Attachment B

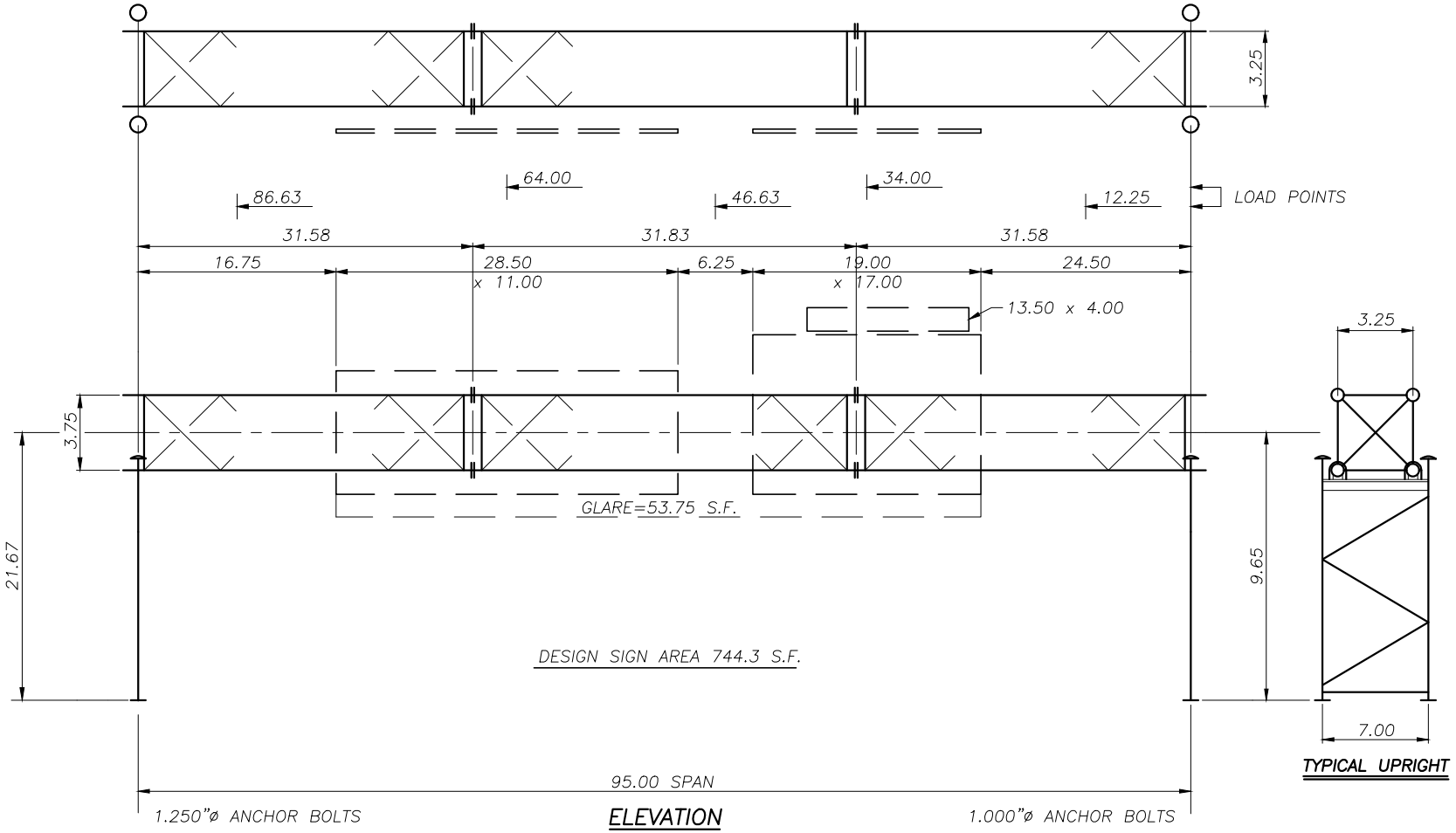

ELEVATION

STR NO: OH-16
STA NO: 440+94.34 (WB)

TRUSS:	CHORDS	6.625 x 0.188
	VERT DIAGONALS	1.900 x 0.200
	HORIZ DIAGONALS	1.900 x 0.200
	STRUTS	1.660 x 0.140
	INT DIAGONALS	1.660 x 0.140

UPRIGHTS:	LEFT POSTS	10.750 x 0.250
	STRUTS & DIAGONALS	2.875 x 0.203
	RIGHT POSTS	8.625 x 0.188
	STRUTS & DIAGONALS	2.875 x 0.203

SOUTH CAROLINA
LICENSED PROFESSIONAL ENGINEER
No. 38665
DAVID A LALLONE

Mar 19 2024

Subject: Box Truss Design Information
Job No: C3546
By: IWL
Date: 2/19/24
Sheet: BT4
GROUP 1
Chk'd By: DAL
Date: 3/7/24

Box Truss Double Pole Structure Design

Reference Walpar Job Number C3546
Reference Design Information Sheet Number BT4 Structure : OH-16 Station : 440+94.34 (WB)
State SC
AASHTO Specification 6th Edition Fatigue Category : II
Design Wind Velocity (V) 100 mph

Structure Dimensions

Span (S)	95.00 ft	Truss Hgt (U)	3.75 ft	Truss Depth (Y)	3.25 ft
End Section Length	32.08 ft	Middle Section Length	31.83 ft	Coeff of Hgt (Kz)	0.94
Left Upright Hgt (H)	21.67 ft	Right Upright Hgt (H)	9.65 ft	Center to center of upright posts (Yu)	7.00 ft

Sign Information **Design Sign Area: 744.25 sq ft**

Sign	Load (i)	Lgth (B_i)	Hgt (D_i)	Location (a_i)	Unit Wgt	Depth	C_d	Front/Back	Z Ecc	Area	Exit Panel
1	2	19.00	18.00	34.00	7.00		1.13	F	6.50	396.0	X
2	4	28.50	12.00	64.00	7.00		1.19	F	6.50	348.3	X

Walkway Information

	Lgth	Location	Width	Unit wgt	Y Ecc
WW1	61.75	47.88	2.54	60	5.65

Load Summary Estimate for Field Use Only

(Distance from right end of assembled truss)

Weight of truss only	7543 lbs
Weight of erected signs & WW	7083 lbs
Center of erected sign & WW+truss load	48.80 ft
Front to Back Overturning on Truss	28160 ft-lbs
Max upright weight	1920 lbs
Max truss section weight	2585 lbs

SOUTH CAROLINA LICENSED PROFESSIONAL ENGINEER
David A Lallone
No. 38665
DAVID A LALLONE

Mar 19 2024

1

BT4 - 1 of 11

Walpar © 2014

Box Truss Double Pole Structure Design

Job No : C3546 Structure No : OH-16 Station : 440+94.34 (WB)

Loads

Unit wind load on sign(s)/C_d: 27.43 psf Unit wind load on exposed truss: 32.92 psf Unit wgt of truss: 74.08 plf Unit ice wgt on truss: 30.57 plf

Truss Area for Wind Load (A_t): 1.60 sq ft / ft ***All loads in charts in lbs, ft or ft-lbs unless noted**

Truss Load Summary For Actual Sign & WW Condition

	Load (i)	Dead	Wind (W_p & W_h)	Ice
Sign and Truss Loads Ref: (BT4)	1	1815	1289	749
	2	4180	12287	1769
	3	463	329	191
	4	4549	11375	1916
	5	1241	882	512
WW Loads	WW1	3705	1240	1648
Left Reaction (R_L)		8020	13817	3412
Right Reaction (R_R)		7932	13585	3373
Maximum Moments (M)		228007	427074	97350
Point of "0" shear (A_m)		46.09	42.71	46.09

** WW/EQ Loads are incorporated into Sign and Truss Loads to determine Reactions and Moments

Serviceability Requirements

Truss DL + IL Deflection	2.52 in
Limit for Deflection	7.60 in
Camber Used (Cu)	3.25 in
Permanent Camber (Cp)	1.47 in

SOUTH CAROLINA LICENSED PROFESSIONAL ENGINEER David A Lallone No. 38665 DAVID A LALLONE

Mar 19 2024

Post Loads

	Dead	Wind	Ice	Group II t_c	Group III t_c	Lateral Stiffness Ratio
Left Upright	1920	668	467	147	220	0.13
Right Upright	954	199	196	62	94	0.87

Walpar © 2014

Box Truss Double Pole Structure Design

Job No : C3546 Structure No : OH-16 Station : 440+94.34 (WB)

Load Combinations for Design Sign Area

Truss Member Loads	DL	DL +WL	DL+1/2 WL+IL
Truss Chords (Pc)	38355	104059	87687
Vertical Diagonals (Pv)	9395	15107	15928
Horizontal Diagonals (Ph)	3457	19359	12612
Vertical Struts (Psv)	6606	8027	9197
Horizontal Struts (Psh)	2250	12598	8208
Truss Moments			
Truss Chords (XMc)	1378	4244	3006

Upright Member Loads	Upright Loads					Web Member Loads	
Left Upright	M_N	M_{tc}	V_N	V_{tc}	Axial	Diagonals	Struts
Group II Comb. 1 (DL+WL)	306942	61034	14485	2887	9940	24885	17597
Group III Comb. 1 (DL+1/2WL+IL)	153471	30517	7243	1443	13819	12443	8798
Group II Comb. 2 (DL+WL)	184165	91551	8691	4330	9940	15902	11244
Group III Comb. 2 (DL+1/2WL+IL)	92083	45775	4346	2165	13819	7951	5622
Right Upright							
Group II Comb. 1 (DL+WL)	133152	26764	13783	2803	8886	29599	20930
Group III Comb. 1 (DL+1/2WL+IL)	66576	13382	6892	1401	12455	14799	10465
Group II Comb. 2 (DL+WL)	79891	40145	8270	4204	8886	18559	13123
Group III Comb. 2 (DL+1/2WL+IL)	39946	20073	4135	2102	12455	9279	6562

Material Information

	Pipe Size (Min Yield)	Unbraced Length	CSR Group II	CSR Group III
Truss Chords	6.625 x 0.188 (52 ksi)	7.58 ft	0.96	0.78
Vertical Diagonals	1.900 x 0.200 (52 ksi)	5.33 ft	0.80	0.84
Vertical Struts	1.660 x 0.140 (52 ksi)	3.75 ft	0.48	0.55
Horizontal Diagonals	1.900 x 0.200 (52 ksi)	4.99 ft	0.90	0.59
Horizontal Struts	1.660 x 0.140 (52 ksi)	3.25 ft	0.67	0.44

	Pipe Size (Min Yield)	Unbraced Length	CSR (Comb. 1) Group II	CSR (Comb. 1) Group III	CSR (Comb. 2) Group II	CSR (Comb. 2) Group III
Left Upright Posts	10.750 x 0.250 (52 ksi)	19.52 ft	0.56	0.30	0.69	0.37
Left Upright Diagonals	2.875 x 0.203 (52 ksi)	8.01 ft	0.76	0.38	0.49	0.24
Left Upright Strut	2.875 x 0.203 (52 ksi)	6.10 ft	0.39	0.19	0.25	0.12
Right Upright Posts	8.625 x 0.188 (52 ksi)	7.49 ft	0.54	0.29	0.64	0.35
Right Upright Diagonals	2.875 x 0.203 (52 ksi)	8.16 ft	0.94	0.47	0.59	0.29
Right Upright Strut	2.875 x 0.203 (52 ksi)	6.28 ft	0.47	0.24	0.30	0.15



Mar 19 2024

1

BT4 - 3 of 11

Walpar © 2014

Box Truss Double Pole Structure Design

Job No : C3546 Structure No : OH-16 Station : 440+94.34 (WB)

Structure Detail Information

Truss Chord Splices

Maximum Design Load at Splice	117184 lbs
Splice Moment (per inch of circum)	3519 in-lbs
Splice Bolt Circle	9.5 in.
Splice Bolt Qty & Size	6 - 7/8" ø A325
Splice Plate Thickness	1.0 in.
Splice Plate Weld	¼ fillet

Upright Detail

	Left	Right
Maximuim Anchor Bolt Pullout	31555 lbs	16567 lbs.
Anchor Bolt Spacing	12 in.	10.5 in.
Anchor Bolt Yield	55 ksi	55 ksi
Anchor Bolt Qty & Size (ea pole)	4 - 1.25" ø	4 - 1" ø
Anchor Bolt Length (Embed)	4.50 ft (3.5 ft)	4.50 ft (3.5 ft)
Anchor Bolt CSR	0.80	0.57
Base Plate Thickness	1.5 in.	1 in.
Base Plate Weld	5/16 fillet	5/16 fillet
Truss Seat	W8x24	W8x24
Truss Connection U-Bolts	½" ø	½" ø

Structure Input (For Foundation Designs)

	Left	Right
Truss DL React (Rd)	10.62 k	10.48 k
Upr DL React (Rv)	1.92 k	0.95 k
Truss WL React (Rh)	14.32 k	16.29 k
Upr WL React (Wv)	0.67 k	0.20 k
Distance To Rh (H1)	21.67 ft	9.65 ft
Distance To Wv (H2)	11.77 ft	5.76 ft
Min Ped Lgth (PL)	9.25 ft	9.00 ft
Min Ped Wth (PW)	2.25 ft	2.00 ft

Sign Hanger Detail

Design hanger spacing 9.00 ft

Sign Hanger U-Bolt type ASTM-A307

SIGN	Max UBL at End	Max Spacing	Hanger U-Bolt	Sign Hanger	Hanger Support
1	6.98 ft	7.75 ft	2 - ½" ø	L5x3x5/16	W6x9
2	4.40 ft	9.00 ft	2 - ½" ø	L5x3x5/16	W6x9



Mar 19 2024

1

BT4 - 4 of 11

Walpar © 2014

Box Truss Double Pole Structure Design

Job No : C3546 Structure No : OH-16 Station : 440+94.34 (WB)

Vibration and Fatigue (Per AASHTO 6th Edition)

Natural Wind Gust Load on Sign(s)/C_d	4.42 psf	Truck Induced Gust Load on Truss	15.59 psf
Natural Wind Gust Load on Truss	5.30 psf	Extent of Truck Induced Gust	12.00 ft
		Truss Area for Truck Induced Gust	1.56 sq ft / ft
		Location of Center of Truck Induced Gust	47.50 ft

Truck Induced Gust Loading

ID	P_{TG} (Uplift)	P_{TG} Torque	Location
Truss Chords	293		47.50
SIGN 1 (PARTIAL)			42.50
Walkway	1265	1906	47.50
Left Reaction	779		
Right Reaction	779		
Maximum Moments	34662		

Truss Load Summary for Natural Wind

LOADS (i)	$P_{NWG(i)}$
1	208
2	1980
3	53
4	1833
5	142
Left Reaction	2226 lbs
Right Reaction	2189 lbs
Maximum Moments	68810 ft-lbs

Load Combinations for Vibration and Fatigue

Truss Members	P_{NWG}	P_{TG}
Truss Chords	10586	4622
Vertical Diagonals		554
Horizontal Diagonals	855	
Vertical Struts		389
Horizontal Struts	557	
Upright Members		
Left Post	6891	389
Right Post	3016	389

Vibration and Fatigue Stresses

	NWG (ksi)	TIG (ksi)	Allowable (ksi)	
Truss Vertical Diagonals		0.52	1.20	
Truss Horizontal Diagonals	0.80		1.20	
Truss Vertical Struts		0.58	1.20	
Truss Horizontal Struts	0.83		1.20	
Truss chord at web members	0.76	1.22	4.50	
Upright Base Connection LT	0.84	0.05	2.60	Socket Connection Base Detail
Upright Base Connection RT	0.61	0.08	2.60	Socket Connection Base Detail
Anchor bolts - LT	1.78		7.00	
Anchor bolts - RT	1.24		7.00	



Mar 19 2024

1

BT4 - 5 of 11

Walpar © 2014

Box Truss Double Pole Structure Design

Job No : C3546 Structure No : OH-16 Station : 440+94.34 (WB)

Left Foundation Design

Boring Type SPT Boring Designation G-137
Major Soil Type Cohesionless Depth to Water NA Surcharge (Frost) Depth 2 ft
Ground Slope 0:1 Consider slope stability? N

SOIL TYPES	
01-GP	07-SM
02-GW	08-ML
03-GM	09-MH
04-GC	10-SC
05-SP	11-CL
06-SW	12-CH

Soil Properties

Depth	N Value	γ' (pcf)	Φ (deg)	S_u (lbf/ft^2)	α	β	f_{SN} (lbf/ft^2)	$(N_1)_{60}$	Soil Type
**0 - 2	12	106	34			1.05	145	24	07
2 - 3	50	125	39			1.20	322	100	07
3 - 40	50	125	36			1.09	1330	44	07

* Soil Type 13 indicates rock layer with N>60 for cohesionless soil or N>40 for cohesive soils
**Top 2.0 ft of soil will not contribute to load resistance.

Soil Bearing Capacity for Left Spread Footing Design

Footing width, B 9.00 ft
Footing length, L 19.00 ft
Eccentricity, e_L 3.40 ft
Eccentricity, e_B 0.69 ft
Effective ftg width, B' 7.61 ft
Effective ftg width, L' 12.20 ft

Total wgt of load, foundation and soil, Pt 93.49 k
Normal moment, ML 318.05 ft-k
Transverse moment, Mw 64.93 ft-k
Distance from ground to bottom of footing, d_{min} 2.94 ft
Distance from ground to bottom of footing, D_f 2.94 ft
Distance to ground water from bottom of ftg, z_w N.A.
Overburden pressure at base of footing, q 0.37 ksf
Weighted average soil unit weight below pad, γ 125 pcf

Ultimate bearing capacity, q_{ult} 56.90 ksf
Allowable Bearing Capacity 19.75 ksf
Bearing Capacity used *** 3.00 ksf

***Note: Bearing capacities greater than 4.0 ksf will rarely effect spread footing pad size

SOUTH CAROLINA LICENSED PROFESSIONAL ENGINEER
David A Lallone
No. 38665
DAVID A LALLONE

Mar 19 2024

1

Walpar © 2014

Box Truss Double Pole Structure Design

Job No : C3546 Structure No : OH-16 Station : 440+94.34 (WB)

Right Foundation Design

Boring Type SPT Boring Designation G-136
Major Soil Type Cohesionless Depth to Water NA Surcharge (Frost) Depth 2 ft
Ground Slope 0:1 Consider slope stability? N

SOIL TYPES	
01-GP	07-SM
02-GW	08-ML
03-GM	09-MH
04-GC	10-SC
05-SP	11-CL
06-SW	12-CH

Soil Properties

Depth	N Value	γ' (pcf)	Φ (deg)	S_u (lbf/ft^2)	α	β	f_{SN} (lbf/ft^2)	$(N_1)_{60}$	Soil Type
**0 - 2	8	104	30			0.70	222	16	07
2 - 3	40	120	30			1.20	329	80	07
3 - 35	49	120	30			1.06	1632	46	07

* Soil Type 13 indicates rock layer with N>60 for cohesionless soil or N>40 for cohesive soils
**Top 2.0 ft of soil will not contribute to load resistance.

SOUTH CAROLINA LICENSED PROFESSIONAL ENGINEER
David A Lallone
No. 38665
DAVID A LALLONE

Mar 19 2024

1

Walpar © 2014

Box Truss Double Pole Structure Design

Job No : C3546 Structure No : OH-16 Station : 440+94.34 (WB)

Left Upright Spread Footing Design

Material/Soil Specifications and Safety Factors

Concrete f'_c :	3000 psi	Concrete wgt :	150 pcf
Rebar yield f_y :	60000 psi	Rebar F_s :	24000 psi
Soil Bearing Capacity :	3000 psf	Soil unit wgt :	110 pcf

Load Safety Factor[1] : 1.15

Loads and Locations From Structure

Truss DL React (Rd)	10.62 k	Base to Truss Load Dim (H1)	21.67 ft
Upright DL React (Rv)	1.92 k	Base to Upright Load Dim (H2)	11.77 ft
Truss WL React (Rh)	14.32 k	Total DL React (DL)	12.54 k
Upright WL React (Wv)	0.67 k	Transverse Wind Component (tc)	3.00 k

Loads at Top of Pedestal from Structure

Axial load (P)	12.54 k		
Moment (ML)	318.05 ft-k	Moment (MW)	64.93 ft-k
Shear (VL)	14.98 k	Shear (VW)	3.00 k

Final Spread Footing Design Sizes

Pad Length (L)	19.00 ft	Pedestal Width (PW)	2.25 ft
Pad Width (W)	9.00 ft	Pedestal Length (PL)	9.25 ft
Pad Thickness (T)	1.50 ft	Pedestal Projection at Ctr (PE)	4.56 ft
		Ground line to top of pad (PT)	1.44 ft

Reinforcement

Pad	Pedestal
Top each way - #4 Bars @ 12" o.c.	4 ea. - #8 Vert. Bars @ 6.33" o.c. @ Ends
X Direction - 9 - #7 Bars @ 12.00" o.c.	16 ea. - #8 Vert. Bars @ 6.06" o.c. @ Sides
Y Direction - 19 - #5 Bars @ 12" o.c.	7 - #4 Ties @ 12" max. o.c.

Serviceability	Quantities
17.33% of footing in uplift	1721 lbs of reinforcement
Safety factor against overturning = 25.64	14.13 cyd of concrete

Uncracked Section Calculations

Wgt of soil above pad (Ps)	23.75 k		
Wgt of concrete (Pc)	57.21 k	Total Area (A)	171.00 ft²
Total Load (Pt)	93.49 k		
X	9.50 ft	Y	4.50 ft
Ix	1154.25 ft⁴	Iy	5144.25 ft⁴
Mx	100.52 k-ft	My	495.00 k-ft

Corner Stresses [Factored[1] (unfactored) loads]	
F1	1.85 ksf (1.68 ksf)
F2	1.07 ksf (1.00 ksf)
F3	-0.76 ksf (-0.59 ksf)
F4	0.02 ksf (0.09 ksf)

Cracked Section Calculations [Factored loads[1] (unfactored loads)]

A1	60.18 ft² (89.70 ft²)	L1	6.69 ft (9.97 ft)	W1	9.00 ft (9.00 ft)
A2	27.53 ft² (22.04 ft²)	L2	12.31 ft (9.03 ft)	W2	2.24 ft (2.44 ft)
A3	41.64 ft² (29.63 ft²)	L3	12.31 ft (9.03 ft)	W3	6.76 ft (6.56 ft)
A'	129.36 ft² (141.37 ft²)				
Xc	1.74 ft (1.36 ft)	X1	6.16 ft (4.52 ft)	Y1	0.00 ft (0.00 ft)
Yc	0.72 ft (0.48 ft)	X2	-3.34 ft (-4.98 ft)	Y2	3.38 ft (3.28 ft)
		X3	-1.29 ft (-3.48 ft)	Y3	0.01 ft (-0.13 ft)
Ixc	448.17 ft⁴ (663.34 ft⁴)	X'	11.24 ft (10.86 ft)		
Iyc	3513.54 ft⁴ (3729.06 ft⁴)	Y'	5.22 ft (4.98 ft)		
Ixcyc	-570.57 ft⁴ (-489.21 ft⁴)				
Mxc	32.95 ft-k (42.08 ft-k)				
Myc	332.61 ft-k (303.28 ft-k)				

Corner Stresses [Factored[1] (unfactored) loads]	
F1	3.10 ksf (2.22 ksf)
F2	0.90 ksf (0.99 ksf)
F3	-1.65 ksf (-0.90 ksf)
F4	0.55 ksf (0.33 ksf)



Mar 19 2024

1

BT4 - 8 of 11

Walpar © 2014

Box Truss Double Pole Structure Design

Job No : C3546 Structure No : OH-16 Station : 440+94.34 (WB)

Left Upright Spread Footing Design (cont.)

Moment and Shear Calculation Results

LL	4.88 ft	WW	3.38 ft	S_{y0}	2.00 ksf	S_{x0}	1.82 ksf
L_{x1}	8.00 ft	W_{x1}	0.00 ft	S_{y1}	1.80 ksf	S_{x1}	1.82 ksf
L_{x2}	5.79 ft	W_{x2}	2.21 ft	S_{y2}	1.50 ksf	S_{x2}	1.28 ksf
L_{y1}	1.50 ft	W_{y1}	4.50 ft	S_{y3}	1.34 ksf	S_{x3}	1.00 ksf
L_{y2}	2.21 ft	W_{y2}	2.29 ft	Pcs	0.38 ksf		
				DTS_y	8.61 k/ft	DTS_x	3.08 k/ft
				M_{YY}	16.61 ft-k	M_{XX}	6.64 ft-k

Reinforcement Calculations

f_{cr} : 1596 psi v_{cr} : 69 psi n : 9.29

b : 12.00 in d : 14.00 in x : 5.25 in

About Y Axis		About X Axis	
p :	0.0030	p :	0.0018
k :	0.2109	k :	0.1669
j :	0.9297	j :	0.9444
f_{ca} :	864 psi	f_{ca} :	430 psi
v_{ca} :	55 psi	v_{ca} :	19 psi
Mt :	363980 in-k	Mt :	145404 in-k
ld_r :	21.14 in	ld_r :	23.63 in
ld_a :	55.50 in	ld_a :	37.50 in
ld_{min} :	47.93 in	ld_{min} :	34.23 in
A_{sr} :	0.48 in²	A_{sr} :	0.19 in²
A_s Used :	0.60 in²	A_s Used :	0.31 in²

Tie Size : #4

Pedestal Calculations

V_1 : 15281 lbs V_2 : 0 lbs V_t : 15281 lbs

About Y Axis		About X Axis	
C_x :	55.50 in	C_y :	13.50 in
G_x :	103.00 in	G_y :	19.00 in
f_a :	4.18 psi	f_v :	483.59 psi
F_a :	1596 psi	F_v :	26334 psi
f_{bx} :	13.42 psi	f_{by} :	304.02 psi
F_{bx} :	1596 psi	F_{by} :	1596 psi
M_x :	82915 ft-lb	M_y :	407960 ft-lb
M_{ox} :	439193 ft-lb	M_{oy} :	2380886 ft-lb
I_x :	4115183 in⁴	I_y :	217389 in⁴
A_g :	2997 in²	A_{sm} :	29.97 in²
A_{st} :	31.60 in²	A_s :	8.69 in²
QTY :	40	A_b :	0.79 in²
X Sp'g :	6.06 in	Y Sp'g :	6.33 in
C_{sx} :	29.69 in	C_{sy} :	8.80 in
N qty :	16	R qty :	4
CSR :	0.20	CSM :	0.36



Sliding friction μ : 0.40

Factor of safety against sliding : 2.00

Mar 19 2024

1

BT4 - 9 of 11

Walpar © 2014

Box Truss Double Pole Structure Design

Job No : C3546 Structure No : OH-16 Station : 440+94.34 (WB)

Left Upright Cylindrical Footing Design

Concrete f '$_c$:	3000 psi	Concrete wgt :	150 pcf
Rebar yield f_y :	60000 psi	Min factor of safety for uplift :	1.00
Reinforcement Clear. :	3 in	Min factor of safety for lateral load :	2.86

Loads and Locations From Structure

Truss DL React (Rd)	10.62 k	Base to Truss Load Dim (H1)	21.67 ft
Upright DL React (Rv)	1.92 k	Base to Upright Load Dim (H2)	11.77 ft
Truss WL React (Rh)	14.32 k	Footing Projection at Ctr (H3)	4.56 ft
Upright WL React (Wv)	0.67 k	C/C of Cylinders (C)	7.00 ft

Normal Overturning Moment (M_{WL})	386.42 ft-k	Effective Hgt (H_{eff})	25.79 ft
Transverse Moment (M_{TL})	77.28 ft-k	Lateral Load (P_{eff})	5.87 k
Resultant Moment (M_R)	394.07 ft-k	Axial Force	9.40 k
Effective Overturning Moment	201.76 ft-k		

Final Cylindrical Footing Design Sizes

Req'd area of steel (A_s)	10.15 in²	Rebar Cage Dia (D1)	28.00 in
1% Cyl Area Min (A_m)	10.18 in²	Vertical bar spacing	6.77 in
Actual Reinf Area (A_p)	10.27 in²	Beam width	3.25 ft
		Beam length	10.00 ft
		Beam height	5.06 ft

USE 36 in DIA x 20'- 0 CYLINDER
w/ 13- # 8 VERT. BARS & 21 - #4 HOOPS

Serviceability	Quantities
Calculated lateral safety factor = 6.7	1837 lbs of reinforcement
Calculated uplift safety factor = 6.5	14.83 cyd of concrete

Side Shear Results
(from Beta Method)

Cylinder Embedment	15.44 ft
Axial load	6.27 k
Uplift load	22.41 k
Weight of shaft	30.03 k
Side Resistance Capacity	145.50 k

Lateral Load Calculation Results
(from Brom's Method)

Soil friction angle Φ	36.4°
Soil unit weight γ	119 pcf
Average $(N_1)_{60}$ over eff depth (BPF)	75
Effective lateral load on cylinder	5.87 k
Effective moment on cylinder	151.32 ft-k
Axial thrust from moment and vertical loads	38.22 k
Rankine Passive Pressure Coeff. K_P	3.54
Ultimate soil resistance P_{ult}	115.99 k
Allowable soil resistance P_{max}	53.94 k
Ultimate soil moment capacity M_{ult}	1530 ft-k
Allowable soil moment capacity M_{max}	712 ft-k
Ground line moment	178 ft-k
Dist. from GL to 0 shear point in cyl.	3.76 ft
Maximum moment in shaft	227 ft-k

SOUTH CAROLINA LICENSED PROFESSIONAL ENGINEER
David A Lallone
No. 38665
DAVID A LALLONE

Mar 19 2024

1

BT4 - 10 of 11

Walpar © 2014

Box Truss Double Pole Structure Design

Job No : C3546 Structure No : OH-16 Station : 440+94.34 (WB)

Right Upright Cylindrical Footing Design

Concrete f '$_c$:	3000 psi	Concrete wgt :	150 pcf
Rebar yield f_y :	60000 psi	Min factor of safety for uplift :	1.00
Reinforcement Clear. :	3 in	Min factor of safety for lateral load :	2.86

Loads and Locations From Structure

Truss DL React (Rd)	10.48 k	Base to Truss Load Dim (H1)	9.65 ft
Upright DL React (Rv)	0.95 k	Base to Upright Load Dim (H2)	5.76 ft
Truss WL React (Rh)	16.29 k	Footing Projection at Ctr (H3)	18.50 ft
Upright WL React (Wv)	0.20 k	C/C of Cylinders (C)	7.00 ft

Normal Overturning Moment (M_{WL})	463.35 ft-k	Effective Hgt (H_{eff})	28.10 ft
Transverse Moment (M_{TL})	92.67 ft-k	Lateral Load (P_{eff})	4.21 k
Resultant Moment (M_R)	472.53 ft-k	Axial Force	8.58 k
Effective Overturning Moment	157.89 ft-k		

Final Cylindrical Footing Design Sizes

Req'd area of steel (A_s)	13.04 in²	Rebar Cage Dia (D1)	27.88 in
1% Cyl Area Min (A_m)	10.18 in²	Vertical bar spacing	6.25 in
Actual Reinf Area (A_p)	14.00 in²		

USE 36 in DIA x 37'- 0 CYLINDER
w/ 14- # 9 VERT. BARS & 38 - #4 HOOPS

Serviceability	Quantities
Calculated lateral safety factor = 7.3	3911 lbs of reinforcement
Calculated uplift safety factor = 8.7	19.37 cyd of concrete

Side Shear Results
(from Beta Method)

Cylinder Embedment	18.50 ft
Axial load	5.72 k
Uplift load	22.56 k
Weight of shaft	39.23 k
Side Resistance Capacity	197.35 k

Lateral Load Calculation Results
(from Brom's Method)

Soil friction angle Φ	30.0°
Soil unit weight γ	115 pcf
Average $(N_1)_{60}$ over eff. depth (BPF)	80
Effective lateral load on cylinder	4.21 k
Effective moment on cylinder	118.42 ft-k
Axial thrust from moment and vertical loads	31.13 k
Rankine Passive Pressure Coeff. K_P	2.76
Ultimate soil resistance P_{ult}	81.09 k
Allowable soil resistance P_{max}	37.71 k
Ultimate soil moment capacity M_{ult}	2129 ft-k
Allowable soil moment capacity M_{max}	990 ft-k
Ground line moment	196 ft-k
Dist. from GL to 0 shear point in cyl.	3.72 ft
Maximum moment in shaft	290 ft-k

SOUTH CAROLINA LICENSED PROFESSIONAL ENGINEER
No. 38665
DAVID A LALLONE

Mar 19 2024

1

BT4 - 11 of 11

Walpar © 2014